PUBLISHED BY THE PERIODICALS PUBLISHING COMPANY
Central Office and Publishing Plant, Buffalo, New York

MEMBERS OF ASSOCIATION OF NATURAL GAS SUPPLY MEN

ASSOCIATION OFFICES

905 Oliver Building, Pittsburgh, Pa.

DIRECTORS

FRED A. MILLER	F. R. HUTCHINSON
T. C. CLIFFORD	A. W. THOMPSON
L. A. ADAMS	WM. PATTERSON
O. F. FELIX	R. A. McKINNEY
W. B. GLOVER	F. W. MINER
WM. B. WAY	B. T. BECHTEL
E. S. ROONEY	GEO. D. ROPER

Acme Fishing Tool Company, Parkersburg, West Va.
Ajax Iron Works, Corry, Pa.
American Atmos Corporation, Pittsburgh.
American Cast Iron Pipe Co., Chicago.
American Foundry Construction Co., Pittsburgh, Pa.
American Heater Corp., St. Louis.
Anchor Packing Co., Pittsburgh.

Bailey Meter Co., Cleveland.
Baltimore Gas Appliance & Mfg. Co., Baltimore.
Bartlesville Supply Co., Bartlesville, Okla.
Bessemer Gas Engine Co., Grove, City, Pa.
Black Steel & Wire Co., Pittsburgh, Pa.
Borden Company, Warren, Ohio.
Bovaird & Seyfang Mfg. Co., Bradford, Pa.
Bradford Motor Works, Bradford, Pa.
Bristol Co., Waterbury, Conn.
Broderick & Bascom Rope Co., St. Louis.
Bryant Heater & Mfg. Co., Cleveland.
Builders Iron Fdy., Providence.
Byers, A. M. Co., Pittsburgh.

Chaplin-Fi
Chapman a.
Clark Bro
Cleveland
Colons M
Colonial
Columbia W.Va.
Columbian
Columbus o., Columbus, Ohio.
Continental Supply Co., St. Louis.
Cooper, C. & G. Co., Mt. Vernon, O.
Wm. M. Crane Co., New York.
Cutler Hammer Mfg. Co., The, Milwaukee

Dayton Pipe Coupling Co., Dayton.
Davison, N. C., Gas Burner & Weld'g Co., Pittsburgh.
Doherty & Co., Henry L., New York.
Dresser, S. R., Mfg. Co., Bradford, Pa.
Duquesne Burner Service Co., Pittsburgh.

Eclipse Gas Stove Co., Rockford, Ill.
Economy Stove Co., Cleveland, O.
Economy Burner & Engineering Co., Pittsburgh
Equitable Meter Co., Pittsburgh.
Eriez, Stove & Mfg. Co., Erie, Pa.
Estate Stove Co., Hamilton, O.

Fenwick-Reddaway Mfg. Co., Newark, N. J.
Fitler, Edwin H. Co., Philadelphia, Pa.
Foxboro Co., The, Foxboro, Mass.
Franklin Co., The, Massillon, Ohio.

Frick & Lindsay Co., Pittsburgh.

Garlock Packing Co., Palmyra, N. Y.
Gas Age, The, New York City.
Gas Appliance Co., Cleveland.
Gas Engineering & Const. Co., Pittsburgh.
Gas Record, Chicago.
General Gas Light Co., Kalamazoo.
Germer Stove Co., Erie.
Gilfillan Machine Works, Ebenezer, N. Y.
Goodsich, B. F. Co., Akron, O.
J. H. Grayson Mfg. Co., Athens, Ohio.
Grinnell Co., Providence, R. I.

Hammon Coupler Co., Pittsburgh.
Hays Mfg. Co., Erie.
Hart Mfg. Co., Cleveland.
Hazard Mfg. Co., Chicago.
Heeter, C. M. Sons & Co., Inc., Butler, Pa.
Hewitt Rubber Co., Pittsburgh.
Hoffman Heater Co., Lorain, O.
Hope Engineering & Supply Co., Pittsburgh.
James Howden Co. of America, Wellsville, N. Y.
Humphrey Company, Kalamazoo, Mich.

Imperial Belting Co., Chicago, Ill.
Ingersoll-Rand Co., Pittsburgh.
International Hale Gas Mixer Company, Chicago, Ill.
International Tank & Mfg. Co., Parkersburg, West Va.

Jarecki Mfg. Co., Erie.
Jones & Laughlin Steel Co., Pittsburg, Pa.

Kisselman & Co., Parkersburg, West Va.
Koppers Co., Pittsburgh, Pa.

LaBelle Iron Works, Steubenville, O.
Larco Wrench & Mfg. Co., Chicago.
Lattimer-Stevens Co., Columbus, O.
Leschen, A. & Sons Rope Co., St. Louis.
Lucey Mfg. Corp., Pittsburgh.
Ludlow Valve Mfg. Co., Pittsburgh.
Lunkenheimer Company, Cincinnati, Ohio.

MacWhyte Co., Pittsburgh.
Manhattan Rubber Mfg. Co., Passaic, N. J.
Manley & Barlow Co., Corry, Pa.
Maxon Premix Burner Co., Muncie, Ind.
McKain, J. B., Fishing Tool Co., Parkersburg, W. Va.
Metric Metal Works, Erie.
Minneapolis Heat Reg. Co., Minneapolis.
Moon Mfg. Co., The, Chicago.
Moore, Lee C. & Co., Inc., Pittsburgh.
Moser Mfg. Co., Kane, Pa.
Mueller H. Mfg. Co., Decatur, Ill.

National Supply Co., Pittsburgh.
National Transit Pump & Mach. Co., Oil City, Pa.
National Tube Co., Pittsburgh.
Natural Gas Industry, Buffalo.
New Bedford Cordage Co., New York City.
New York Belt'g & Pack'g Co., New York.
Northrup Equipment Co., Parkersburg, West Va.

Ohio State Stove Co., Columbus, O.
Oil & Gas Journal, Tulsa, Okla.
Oil City Boiler Wks., Oil City, Pa.
Oil Trade Journal, New York.

Oil Well Supply Co., Pittsburgh.
Oxweld Acetylene Co., Chicago.

Parkersburg Mach. Co., Parkersburg, W.Va.
Parkersburg Rig & Reel Co., Parkersburg, W. Va.
Peerless Heater Co., Pittsburgh.
Pennsylvania Furnace & Stove Co., Warren, Pa.
Petroleum Publishing Co., Tulsa, Okla.
Petroleum Supply Co., Steubenville, O.
Pittsburgh Meter Co., East Pittsburgh.
Pittsburgh Reinforced Brazing & Mach. Co., Pittsburgh.
Pittsburgh Supply Co., Pittsburgh.
Pittsburgh Valve & Fittings Co., Pittsburgh.
Pittsburgh Valve, F'd'y & Const. Co., Pittsburgh.
Pittsburgh Water Heater Co., Pittsburgh, Pa.
Plymouth Cordage Co., N. Plymouth, Mass.
Pratt & Cady Co., Inc., Hartford, Conn.
Precision Instrument Co., Newark, N. J.
Prichard Supply Co., Mannington, W. Va.

Rathbun-Jones Eng. Co., Toledo.
Reading Iron Works, Reading, Pa.
Reid, Jos., Gas Engine Co., Oil City, Pa.
Rensselaer Valve Co., Pittsburgh, Pa.
Reliable Stove Co., Cleveland.
Republic Iron & Steel Co., Youngstown, O.
Republic Rubber Co., Youngstown, Ohio.
Republic Supply Co., Houston, Tex.
Reznor Mfg. Co., Mercer, Pa.
Riesenman Mfg. Co., Ltd., Franklin, Pa.
Robinson Packer Co., Tulsa, Okla.
Roebling, John A. Sons Co., Trenton, N. J.
Geo. D. Roper Corp., Rockford, Ill.
Rossendale-Reddaway Belt'g & Hose Co., Newark, N. J.
Ruud Mfg. Co., Pittsburgh.

Safety Gas Stove Lock Co., Nashville, Tenn.
Sands M
Sanitary
Schaeffe rgh.
Selas Co
South C
Spang,
Sprague
Stacey M
Steele & s.
Stitt Ig
Stokes I
Strause
Superior
Symmon

Taylor, W. P. Co., Buffalo.
Toledo Pipe Thr'd'g Mach. Co., Toledo, O.

Union Rubber & Asbestos Co., Trenton, N. J.
United Seal Co., Columbus.
Upson-Walton Co., Cleveland, O.
U. S. Rubber Co., New York.

Walker & Pratt Mfg. Co., Boston, Mass.
Welsbach Co., Gloucester City, N. J.
Westcott Valve Co., Seneca Falls, N. Y.
Western Gas Construction Co., Fort Wayne, Inc.
Westinghouse Eectric & Mfg. Co, Lester, Pa.
Wheeling Steel & Iron Co., Wheeling.
Williamsport Wire Rope Co., Williamsport, Pa.
Worthington Pump & Mach. Corp., Buffalo.

York Derrick Co., Washington, Pa.
Youngstown Sheet & Tube Co., Youngstown, O.

ANNUAL CONVENTION NATURAL GAS ASSOCIATION OF AMERICA
and EXHIBITION OF SUPPLY MEN'S ASSOCIATION
Kansas City, Kan., May 15-17, 1922

THE NATURAL

GAS INDUSTRY

TRANSPORTATION — GASOLINE PRODUCTION — DISTRIBUTION

SUBSCRIPTION—
$2.00 IN THE U. S.

CONTENTS FOR JANUARY, 1922

VOLUME 16
THIS NUMBER 1

PUBLISHER'S NOTICE

PUBLISHED MONTHLY.

Advertising Copy should be in by the 5th of month previous to issue.

SUBSCRIPTION RATES: In the United States, $2.00; foreign countries, $3.50; Canada, $3.00.

ADVERTISING RATES on request.

CORRESPONDENCE IS SOLICITED from all those interested in Natural Gas and kindred industries.

Buffalo Long Distance (Day) Bell Telephone, Tupper 6866

Cable Address:—"Publight, Buffalo."

Address General Correspondence, Editorial and Advertising Matter to Central Office.

PUBLISHED BY

PERIODICALS PUBLISHING CO.,
BUFFALO, N.Y.

LUCIUS S. BIGELOW, *President and Editor.*
HARRIS S. BIGELOW, *Vice-President.*
A. CARYL BIGELOW, *Secretary.*

Entered as second class matter December 1, 1910, at the Post Office at Buffalo, New York, under the act of March 3, 1889.

CONTENTS OF THIS ISSUE

AROUND THE BELT

FROM THE EDITORIAL MAIL BAG

FINANCIAL

[illegible]

We are optimistic on the banking and money situation and on investment conditions. We expect to see cheaper money and higher prices for bonds and good dividend paying stocks this year. We want to be optimistic on the business situation but we believe in looking the facts squarely in the face.

We think that business was at its worst last May and that it is now on the upgrade. Last May it was about 30 per cent below normal. In October and November it was about 15 per cent below normal. These are the estimates of the statistical department of one of our greatest industrial [illegible]. We agree with this authority that while there is some slackening of activity under way conditions are improving. Whether the permanence of the current betterment in underlying economic conditions is [illegible] the very success of the movement.

The bright spots in our industrial [illegible] are the building trade which is 45 per cent above last year, [illegible] woolens, cotton and [illegible] which are nearly [illegible] and in the [illegible] the leather goods [illegible] and electrical industries [illegible] improvement and are [illegible] the industries also showing improvement.

It is regrettable that in western agriculture the [illegible] are in marked [illegible] affect the manufacture [illegible] agricultural implements and [illegible] business [illegible] the farmer.

Mercantile lines are reported [illegible] the case with building [illegible] with exceptions [illegible] place of concerns which are [illegible] dealers [illegible]

[illegible] were placed by the government [illegible] sales office [illegible] but in other departments [illegible]

[illegible] department [illegible] are optimistic [illegible] are taking [illegible] industries are [illegible] per cent normal [illegible] are very much [illegible] the [illegible] industry has changed materially and the sugar industry [illegible] depressed.

[illegible] have been passing and that we must [illegible] movement.

[illegible] must become [illegible] the same.

[illegible] a particular [illegible] It is not [illegible] greater ability [illegible] the [illegible] Washington [illegible] good will be [illegible]

[illegible] happening that [illegible]

[illegible] the [illegible] Bureau of Labor [illegible] law [illegible]

Words are the only things that last forever —Hazlitt

Manager of the Company, stated that their sales of meters in November was the largest they have ever had in that month, and as this concern is an established one in the field, such a record cannot be attributed to some abnormal condition brought about by a new concern introducing something of a very unusual nature. The product of a meter concern is to a large extent what might be termed a "usual product."

Of course, many of the meters sold by the Sprague Company in November are not as yet in service and, therefore, are not as yet, to any large extent, rendering returns to the companies purchasing them; however, the meters ordered of the Sprague Company will undoubtedly soon be merrily clicking with only a small percentage as replacements.

In visiting various of the gas companies recently, our editor has found an upward trend, and a spirit of greater confidence than has been noticeable during the recent past. Better conditions are certainly in the making.

ASSOCIATION AMALGAMATION

THE suggestion made by President Munroe, Chief Executive for 1921 of the American Gas Association, namely, that an amalgamation of the two gas associations, the Natural Gas Association of America and the American Gas Association would be desirable, we do not at all believe to have been born of a desire to see the Natural Gas Association absorbed by the American Gas Association, but that as for instance, the National Commercial Gas-Association lost its identity only in the matter of name, it becominig the Commercial Section and the Manufacturers' Section in the American Gas Association, so we believe the thought on the part of President Munroe was that while there ought to be but one national gas association, the natural gas element now expressing itself in a separate association should continue, as a unit, but within one general gas association in the United States, that section essentially covering the phase of the gas field known as natural gas.

Whether amalgamation is or is not best, is a thing yet to be determined, but should amalgamation take place at any time in the future, then in the general officering and in the directorate, the natural gas interests the manufacturing interests, and the manufactured gas interests should all be represented, thus, as it were, forming a central governing organization that would work to the general advantage of gas manufacturers, gas producers, and the manufacturers of gas appliances, gas equipment and supplies.

If desirable, it would not be necessary that the two divisions of the association formed respectively of manufactured gas men and manufacturers of their requisites, and natural gas-men and the manufacturers of their requirements should meet at one and the same time, or in one and the same city. In fact, from some viewpoints, it would be better that they should not do so, in that the manufactured gas interests would naturally not find a meeting in certain sections of the country nearly as desirable as in other sections, and vice-versa, nor is it quite likely that the two branches of the great gas-field would find the same time of year as convenient for one as for the other.

It is true that natural gas is diminishing in volume, so far as explorations of pockets have thus far gone, but we believe there are great possibilities yet remaining. Who knows definitely that large deposits may not be awaiting future efforts, greater wells possibly than ever before.

Save for certain districts, a natural gas supply may be adequate for very many years to come, while in other districts through the mixing of natural gas and the manufactured product, a very long bridge may be built, to span the period between the present and a time when exclusively manufactured gas shall have supplanted the natural product.

We are inclined to believe that though it might be practicable in some manner to unite the two associations within a central organization leaving the two bodies to operate quite separately in the matter of details, that a large number of those who are back of the Natural Gas Association of America would object strenuously to outright amalgamation.

It was quite a different matter when the National Commercial Gas Association and the American Gas Institute came together and thus formed the American Gas Association, since those two organizations were essentially in one and the same field, simply each doinig a different type of work, each necessary to the other.

Of course, the future will tell the story, and it is not for us to say yea or nay, but at least for the present amalgamation we believe to be an unknown quantity.

OKLAHOMA ASSOCIATION ANNUAL CONVENTION

THE fourth annual convention of the Oklahoma Utilities Association will be held March 14, 15 and 16, 1922, at Oklahoma City.

A number of interesting exhibits by electrical and gas manufacturers, jobbers and suppliers, will be features of the convention. A number of prominent speakers in the public utility industry are being engaged by the committee which is in charge of the arrangements. New Officers will be elected at the convention.

The present officers of the association, elected at the last annual convention, which was held in Oklahoma City, March 8, 9, and 10, 1921, are as follows:

President, John W. Shartel, Oklahoma City, vice-president and general manager, Oklahoma Railway Company; First Vice-President, C. E. Devin, manager, Apache Telephone Company, Apache, Oklahoma; Treasurer, William Mee, president, Security National Bank, Oklahoma City, Oklahoma; Manager, H. A. Lans, Oklahoma City,, Oklahoma.

The philosophy of one century is the common sense of the next.—Beecher.

In Wyoming

Pipe Line Constructed Through Rough Country Completed in Record Time in Spite of Obstacles

By R. L. LORD,
Mount Vernon, Ohio

Mr. Lord has been in active charge of the construction work discussed in the following communication which we, therefore, are enabled to publish as containing facts, although some statements contrary to statements made in the following have appeared in other publications. The following was especially written for the NATURAL GAS INDUSTRY Magazine.—Editor's Note.

THERE are three apparently distinct gas domes in line, running parallel and a few miles south of the Ferris Mountains, approximately thirty-five miles north of Rawlins, Wyoming. These are known as the Wertz Field at the west, where one well has been completed with a rock pressure of 1800 pounds and a volume of forty-three million cubic feet, controlled by the Producers & Refiners Corportaion, of Denver, Colorado. The middle dome, known as the Mahoney Field, has several wells, owned by various companies, all of them reported to be of large volume and heavy pressure. The eastern field, known as the Ferris Dome, eighteen miles east of Wertz, has four good gas wells, controlled by the Producers & Refiners Corporation.

In early September, a contract was made between the Producers & Refiners Corporation and the Midwest Refining Company for the installation of a line, to be owned by the two companies jointly, for transporting gas from the Wertz and Ferris Fields to Casper to supply a minimum of thirty million cubic feet daily to the Midwest Refinery, which, since its combination with the Standard of Indiana Refinery during September, becomes one of the largest refineries in the world. It has previously been using from the New York Oil Company's lines, fifteen million cubic feet of gas daily, and the new line is intended to be in addition to that supply.

The Hope Engineering & Supply Company has been actively engaged in pipe work in Wyoming, beginning with the Franco-Wyoming Company oil line, built ten years ago and now owned by the Midwest Refining Company. During 1920-21, it designed and constructed the New York Oil Company's system supplying Casper, including the distribution system in that city. They had also handled work for the Producers & Refiners Corporation in Oklahoma and elsewhere and at the same time the contract between the Producers and Midwest was signed, were constructing for the Producers Company a piping system to supply the town of Riverton, including distribution system, as well as a main line from the Sand Draw Field, twenty-one miles south of Riverton.

The joint owners of the new project desired that a line should be constructed before winter to get the system in service as quickly as possible and avoid the heavy expense of operation, in a Wyoming winter. They therefore, turned this work over to the same Hope Company, who supervised purchase of material, as well as construction. While preliminary arrangements were made on September 7, permitting placing of some orders for material and preparation of equipment, the contract was not definitely signed until September 22. About this time the survey and right-of-way contracts were started, with the construction work following close after.

The line required eighteen miles of 10-inch pipe from the Wertz Field to the Ferris Field to carry 400 pounds pressure; twenty-four miles of 12-inch pipe from Ferris through the Sand Creek Pass in the Ferris Mountains to a point just south of the Sweetwater River, expected to carry 350 pounds pressure, and forty-eight miles of 14-inch pipe from the Sweetwater River to Casper, carrying 275 pounds pressure. In addition to this, all branch lines, including drips, regulators, meters, etc., for the two fields, were handled. The pipe was furnished by the Mark Manufacturing Company from the mills at Zanesville and Indiana Harbor and was put through in record time, although some delay in the 12-inch, which should have been constructed in the early fall, tended to delay the final completion longer than was expected.

The material, amounting to over ten thousand tons, was hauled from two points, Casper and Rawlins, about one hundred and thirty miles apart, over sage-brush trails along the pipe line. Some of this pipe was hauled seventy-one miles and the average haul was nearly forty miles.

Pipe laying on the 10-inch began on October 8 on the arrival of the first couplings. These couplings were received in Rawlins late on the night of the 7th and the pipe laying began forty miles away the next morning. The 14-inch and 12-inch pipe laying was started on the arrival of the first complete material October 20th and 25th, respectively. The last joint of pipe, tying together the line, was laid in Emigrant Gap on the old Oregon Trail, twelve miles out of Casper, on December 13th, sixty-six days from the start.

The pipe was hauled approximately 30 per cent from Rawlins to a point fifty miles from that city over a

A trick is at best but a mean thing.—Le Sage.

road on which, with the exception of drilling camps, there was not one house in sight of the road for the entire distance. The section just south of Ferris Mountains and leading through the Sand Creek Pass was through a country of bare sand dunes, sometimes miles in length, and roads for trucking were made by filling the ruts in the sand with sage-brush. Trucks made two round trips in twenty-four hours from Rawlins through the Pass, even though the road was so bad that the truck running light could not go back by the same course which they followed when loaded, but found it necessary to go approximately twenty miles farther around through the next pass, known as Whisky Gap. The haul from Casper covered sixty-four miles of 14-inch and 12-inch pipe, running from Casper straight out over the hills, and was distributed in fifty-one days. Nearly one hundred and forty trucks were in use in hauling pipe from the two towns and waiting on construction camps.

The pipe was laid in a ditch 20 inches wide and 42 inches deep. Approximately eighty miles of this was dug with Buckeye ditching machines, the section through Sand Creek Pass and a few other points in rough territory being ditched by hand. Three Buckeye machines were used on a twenty-four-hour day service until the weather became so cold that operators could not handle the work during the night; a fourth machine, taken from the Riverton work, was then put on and ditching completed during the first week of December. One ditching machine accomplished 7,800 feet of which in a twenty-four-hour run. One pipe gang laid 9,300 feet of 12-inch pipe in a December day; another gang laid 8¼ miles in six consecutive days. On two different days 3¼ miles of pipe were laid by the three gangs.

The weather for the greater part was exceptionally fine, in fact, a matter of wonder to the old-timers in Wyoming, this being the first winter in the last twenty that the Sand Creek Pass was not snowed full long before the date of the completion of this work. However, a few severe winter storms interfered with the work somewhat during late November and early December. At points in the neighborhood of Ferris Mountain, temperatures as low as twenty below zero have been recorded during the progress of this work.

The line traverses a territory, ranging from 5100 to 7000 feet elevation, largely over Government land, and for a good portion of the way practically uninhabited which, when considered with the time of year, makes the construction a matter of general surprise to the gas and oil men of Wyoming, who did not believe it possible that the line could be finished before next summer. The enthusiasm and loyalty of our pipe line organization stand out in this case as an example of what such men are capable of doing when their heart is in the work.

THE PUBLIC AND THE CORPORATIO

IT is rather odd to note how we often separa our discussion of gas matters, the public the utilities or gas corporation. The trut the matter is, that while frequently not so lized the two are synonymous, for the corporatic operated with invested moneys of the public whi turn the public is the user of, and to no small degr absolutely dependent upon, the product, be it mant tured or natural, provided by these interests.

The managers of these companies or corporations as it were, employees of the public, for it is the mc of the public, either invested or spent in the purcha the products, which pays the employee whether h president, general manager, superintendent, or one ing position of other nature.

The public should feel it a privilege, in fact, a to bring to the attention of the gas company, any irr larities or discrepancies that may come to its atter By doing so, members of the community will not be serving the company that serves them, and in va cases that they are part owners in, but also serving neighbors and themselves. On the other hand, the pany should invite and gladly hail those to its offices have constructive suggestions and criticism to offe whose non-constructive-criticism through better ur standing might be dissipated.

The closer the feeling of relationship between th termed "public" and the so-termed "corporation," better; and the greater the effort on the part of the pany to eliminate all differences of viewpoint, the sc will unity of feeling and harmony exist.

First, the gas-manager should convince or "sell self" with a full appreciation of the fact that he an company are both a part of the public; when don should at once set about to likewise convince the p that the interests of both are one.

At least the so-termed "public" and the so-te "corporation" should become hyphenated, if not act amalgamated in purpose to each serve the other. become amalgamated in feeling would, of course, b acme of excellence; to become hyphenated is the step. Let's try it out.

The public should certainly not be the servant o public. There should be no servant and master could there be if these two interests that have for years been sadly divorced, were to become hyphe or amalgamated in a harmony of spirit and purpose as the Golden Rule teaches.

Let us in 1922 seek diligently means whereby may come about amalgamation of purpose each his duty to the other. Thus shall we see acme of se through the hearty united co-operation of these elements that exist in all of our gas-served cities, na the public and the corporation. Let the gas int "start something" in this direction.—The Editor.

Valor consists in the power of self-recovery.—Emerson.

Accident Prevention

Treating With Accidents to Meter Readers and Other Employees on Equipment Outside of the Company's Premises and Means of Prevention

By J. A. Tewksbury
Chief Inspector Boston Gas & Electric Company

IN handling the subject of "Accidents to Meter Readers and on Installation Outside the Company's Premises," a division into two parts seems logical.

The first department to come in contact with the gas after it leaves the Company's premises, is the street or distribution department, which handles the installation of mains and services.

The next departments in order, are the fitting shop and meter reading departments, including the "turn on and shut off men." The first division of the subject takes the main gang. The duties and the hazards commonly met by these men are as follows:

The gas mains of the present day are either of cast iron or steel pipe, the latter being the so-called wrought steel pipe in general use. Cast iron pipes are joined together with a bell and spigot joints, using case lead, lead or cement packing or with a universal joint, using white lead or red lead packing. Steel pipes are screwed, welded, flanged or joined by use of a patent coupling.

Several cases of injury have been cited where workmen have received injuries while making connections or repairs. I believe that most accidents of this nature could be avoided if the pipe layer or man making repairs, would take ordinary precaution to see that the laborers are engaged in putting pipe in position by means of cross ropes from top of trench, that keeps his hands and arms in the clear, while guiding pipe as it comes will meet. Burns occur in most cases from the careless handling of the ladle, as the metal is being poured at and or in joint.

Care should be taken to keep moisture such as snow or ice, from the hot metal and pipe layer should wear a pair of pipe fitting goggles.

Care should be used in choosing the type of a gauntlet for means but under no circumstances should laborer be allowed to wear a glove with gauntlet shed.

Accidents under the class of work have resulted from cave-ins, and in the case of gas and pipe [illegible] always be careful to guard against cave-ins and possible injuries to workmen. In such work the weight of the earth thrown out should be kept back at least two feet from the edge of trench, and sufficient cribbing or bracing used to insure safety.

Tight cribbing is usually unnecessary unless the trench is more than six feet in depth, or the soil very treacherous in nature. Generally either one or two sets of stringers between each bulk head, held parallel with trench walls by use of screw braces will suffice. The foreman should, however, use his discretion and avoid taking any chances.

After the trench has been completed for a sufficient distance, the work of pipe laying can commence. For sizes up to twelve inches, the use of a derrick is unnecessary, the length of pipe being rolled to the edge of the trench, and let in by use of ropes. In this operation two ropes are necessary, one at either end of pipe, a knot tied in one end of ropes that are laid at right angles to the trench beneath pipe. The men standing upon the stationary end of ropes push the pipe over the edge of trench, and laying out the other end of rope, over the top of pipe to allow it to slowly roll into trench.

The men handling these ropes should wear gloves to protect their hands from rope burns, splinters, etc. For pipes over twelve inches in size the use of a portable derrick is recommended. In this case the pipe should be shackled over the trench opening in as near the position it is to occupy as is possible. The weight of the pipe being lifted with the derrick, the shackle should be removed and the pipe lowered.

Where the main is of small size, or it is desired to supply new consumers, before the completion of the entire job, the connection to existing mains may be the first thing to be done, and the gas carried along as the pipe is laid. This policy is not to be recommended if it can be avoided, as there are hazards to every length of pipe laid in the possible failure of the bags and stoppers.

In bagging off or stopping of the mains temporarily there are two methods in use. By means of collapsible rubber bags that are inflated with air after being inserted in pipe, and by means of expansion stoppers. Experience teaches that each has their particular advantages and disadvantages, while a combination of the two makes an ideal arrangement. The gas bag is liable to burst or become dislodged by an excess pressure, but is usually a gas tight arrangement, while the

stopper when properly set will not become dislodged, but is not as a general rule, gas tight. It is recommended that on all mains six inches or over, both the bag and stopper be used. By this arrangement the advantage of one offset the disadvantage of the other.

Another precautionary measure taken by the Company, that I represent, is, that all pipe layers or workmen, connecting or tapping the main, where workmen are liable to be overcome with gas, shall wear some type of breathing device. At first we had the two hour, heavy type of a self-contained oxygen breathing device, but in our work the men complained they were too heavy to work in, also they were greatly hampered in getting in and out of trench.

In most instances we could not get the men to wear them, stating they would sooner take the chance of being "gassed." After this discovery was made, we adopted the lighter type, one-half hour breathing device, manufactured by the same company. We also have a hose arrangement, equipped with a positive face mask. Since the time of the adoption of the lighter devices, we have experienced no trouble with the men, and all wear them while making gas connections.

Falling or tripping, another hazard to be met in the laying of gas mains, is largely due, I believe, to the carelessness of injured or their fellow workers. All tools, such as bars, picks, shovels, etc. should, when workmen are through with them, be returned to tool box, and should at no time be left carelessly laying around trench where someone is liable to stumble over them, or knock them into the ditch.

Another feature in this class of work is the danger of falling pipe, the lengths should, if possible, be placed a safe distance away from opening of trench, or if this is not possible, wedges should be placed under the lengths to prevent rolling.

At the time of lowering pipe to its place at bottom of the trench, no one should be permitted in the trench until the pipe has been completely lowered, and then it is time for pipe layer, with assistance of men on top to place the pipe in position, ready for coupling. The foreman should at all times assign plenty of men to carry out the work, to prevent workmen receiving a strain from overlifting.

After the main has been connected up and before the gas is turned on in consumer's premises, or turned into the existing main systems, the air contained in the pipes must be thoroughly expelled. In small mains this may be safely and thoroughly done by removing plug at the extreme end of the new system. In a large installation this becomes of vital importance, and of extremely hazardous nature.

In purging large main installations a stand pipe should be arranged in the holes to be used for "gassing" long enough to discharge over the heads of pedestrians, a controlling valve should be conveniently arranged in the stand pipes, and a fine mesh gauze inserted near the top of stand pipe, all lights and flames should be kept away, and in no case should an attempt be made to light or burn the escaping mixture.

When a consumer makes application for gas service, in either a new or old building, on streets where the gas main has been laid for some time, the Company employs several special crews (consisting of three to ten men) in this work. In many cases the men are ignorant and of foreign birth, consequently more liable to accidents, and the foreman must constantly be on the job, reminding and talking safety to the men.

Tapping the service mains is similar in this work to that in the new construction, and the same precaution should be taken to protect the worker.

Curb valves are required by city fire ordinances on all services larger than two inches. We use the gate type valve, which varies in weight from seven to forty pounds, according to size of service on which it is to be installed, careful handling at all times to prevent dropping valves in trench striking the workman below, also the same precaution should be taken when installing to prevent worker from being "gassed."

While drilling through cellar or basement walls, the worker should be furnished with proper fitting goggles, and care should be taken to see that hand tools are in proper condition; that drills have no mushroomed heads, and hammers do not have cracked or broken handles.

The second division of the subject, while involving several departments of the Company, has to deal with the interior of the consumer's premises. The common hazards are as follows:

Meters and governors are installed by the Gas Fitting Department, after the service has been installed by the Distribution Department on the consumer's premises.

While this Company does no piping of buildings for light, and feels that its liability ceases at the meter, we believe that the consumers should profit by our experience, and, therefore, insist on two inspections on all work done by outside plumbers or fitters. One inspection to be made before the piping is concealed and the last and final inspection to be made after the pipes have been plastered over. The former is to ascertain if the piping has been laid in accordance with the rules and regulations of the Company, governing size of pipe and methods of installation, while the latter is to ascertain if the job is tight. At each inspection the piping should be subject to air pressure.

Upon setting meters or appliances, the fitters should take precaution to see that all tools are in good condition, such as wrenches with bad handles, jaw sprung or worn smooth from use. Particular stress should be laid on the subjects of proper objects on which to stand, while working on meters or appliances where condition demands. A number of injuries have been recorded caused either from wrench slipping or breaking, due to defective jaws or handles, or the object on which workman was standing giving away, and allowing him to fall.

The fitter should instruct the consumer in the use of appliances he has installed on their premises, the oven

Human life is more governed by fortune than by reason. Hume.

r range should receive a goodly share of the pre-
mary instruction The consumer should be in
ed to always open both doors before lighting, and
positive that gas is burning before closing them
tion has been given this fact in late years by the
facturer, so that on most modern ranges an oven
sion is a practical impossibility, but an impression
refulness without creating fear is the thing to be
d

water heaters should be equipped with a flue or
pipe, connected direct to chimney, or some other
le place whereby the fumes will be carried off
expelled into the air outside the building No
heater should ever be installed in a room of less
1500 cubical feet air capacity, unless such room is
ped with a permanently open ventilator of not less
13x14 inches dimensions In no case should a
ater heater be permitted to be installed in a bath-
or bedroom

r permanent abolishment of the use of rubber tub-
r metallic tubing with rubber ends, or in fact, the
hment of all rubber connections for gas appliances
hing to be very much desired There is no reason
all hot plates or other small appliances cannot be
connected with pipe and fittings, while the mov-
e temporarily connected appliance, such as room
ts etc should be connected with metallic tubing
with a ground joint union at either end I be-
more life and property has been jeopardized by
r gas connections than perhaps any one thing per-
g to the gas industry

hing pulls apart becomes leaky, the ends split or
w so large that they fall off of the hose nipple or
someone stumbles over the tubing or steps on it,
all result in the same thing, escapement of gas
consequent hazard

ile the work of a fitter is not particularly hazard-
it may become dangerously so at times He is
ng with a gas, that under favorable conditions
dangerous, but which may, as a result of accident
competent handling, become a deadly menace

workmen should be forbidden to use open flames
atching for leaks A number of accidents which
each year from naked flames being employed in
arch of leaks demonstrate a necessity for an abso-
prohibition

there is a strong odor of gas about the premises
ing leak the first thing to be done is to open
and windows to ventilate the rooms where the
is detected Then examine all fixtures and appli-
in the rooms and all exposed piping Make exam-
ns either by smelling along fixtures and pipe or by
g fingers over them and smelling fingers or by
ng for the sizzling noise made by escaping gas
e the above methods fail to locate the leaks, apply
on soap and water, by means of a soft brush
exposed piping and fixtures particularly to each
fitting or joint and along pipe seams watching closely for bubbles that will appear where a leak of any magnitude exists

Meter reading, turn on or shut off of meters, is handled by the Meter Reading Department The largest num-
ber of accidents occurring to members of this depart-
ment is caused by forces outside the Company's prem-
ises, over which we have no control, such as dog bites, power vehicles and collisions Meter readers should be furnished with an electric pocket flash light, and the practice of using matches while reading meters should be forbidden One of the greatest sources of evil we have to contend with from the meter reader is his effort to locate a gas leak around meter when requested or told of leak by the consumer This is a very dan-
gerous practice, as in most cases the man is ignorant of the gas business or the dangers attendant either from fire or explosions All men upon entering any dark hall or cellarway should first make certain that passageway to the meter is unobstructed, and that no broken risers or treads exist on stairs, that boxes or other material lying on the floor cannot be stumbled over, causing a fall and possible injury

As a further precaution to our meter readers at any house where there is a vicious dog, dangerous stairways, or dark or dangerous basements, we have this informa-
tion printed on the meter book, so if a new man goes there he knows what the danger is before he enters the house This costs but very little time and expense and prevents many accidents of this nature

As a further incentive to keep the foremen of the various departments interested in safety, we have in-
stalled a safety competition, based on lost time accidents Each competition extends over a period of six months The standings of the various departments are posted on all safety bulletin boards through the various plants on the first of each month When this competition was first started, some two years ago the departments were grouped in two heads, each having its handicap, based on the frequency and severity rate of the departments for the two years past To the winning department the Company presented a silver trophy cup, which, having been won three times in succession, it would remain permanently in the department, and $100.00 cash bonus to the foreman of the winning department While this plan worked well, it was decided that a higher degree of efficiency could be obtained if the various departments could be grouped under two classes according to their employment hazard

We now award $50.00 to the foreman of the depart-
ment having the highest standing in each of the above groups, at the end of the six months competition Also a trophy cup is presented to each department and if won three consecutive times remains permanently in that department Some time ago we began and a Sugges-
tion and Suggestion Department was organized of the heads of the different departments Meetings are held once a month We have installed suggestion boxes throughout the various plants and urge suggestions here, and all the workmen are encouraged to offer

To persevere in one's duty and be silent is the best answer to calumny.—Washington.

suggestions regarding their work, whereby greater safety and efficiency may be obtained. These suggestions are collected a few days before our meeting and are carefully looked over and numbered, and then brought before the meeting for discussion. We also have a committee of four who afterward go over the suggestions and award three capital prizes, namely, first, $5.00; second, $3.00 and third, $2.00. Also each man receives one dollar for each suggestion submitted by him.

In conclusion it might be well to mention a few statistics of the work carried on by this Company for the year 1919, together with the number and nature of accidents occurring throughout the various operations in the several above described departments.

In the Gas Distribution Department, a total of 20,992 feet of new main was laid, making at the end of the year a total of 2,108,556 feet of main (all sizes) in use in the city. Also this department connected or put in gas services on 835 new installations, making a total of 42,858 services or gas connections in use in the city, with but two accidents, both from gas poisoning and with the loss of only three days' time; and these two accidents were caused by the men taking a chance. They had safety devices but did not use them.

In the Gas Fitting Department, a total of 2,561 meters were connected, while 290 were disconnected, leaving a balance of 49,763 meters in service (not including the changes of meters due to leaks and other causes, which were also handled by this department); also 2,607, all types of appliances, were set, and 24 disconnected, making a total of 86,468 appliances in service throughout the city. We feel that this department had an unusual record, insofar as they did not have a single accident which resulted in the loss of time to workmen, during the year, a record that they are so far this year in a fair way to maintain.

In the Meter Reading Department, an average of 49,763 meters were in service at the end of the year on the consumers' premises, employing an average of twenty-five men per month. In this department occurred 32 accidents, with a loss of 79 days. Most of these accidents were due to animals or power vehicles over which we have no control.

The writer is indebted to Mr. Geo. Wherle, for excerpts from his book, "American Gas Practice." —By courtesy National Safety Congress.

K. & G. HAS NEW YORK OFFICE

The Kansas & Gulf Company has opened a branch office at 111 Broadway, New York City, for the transaction of its eastern business.

The Kansas & Gulf Company operates as a producer in Arkansas, Kansas, Oklahoma and Texas. Its normal daily production of approximately 5,500 barrels is expected to be increased by the completion of three new wells now drilling in the Fox Bush Field south of El Dorado, Kansas.

Executive offices of the company are located in 332 South Michigan Avenue, Chicago. The general offices are in the Petroleum Building, Tulsa, Oklahoma.

THINGS TO REMEMBER AND SOME OF THEM TO TEACH TO THE PUBLIC

GAS wastage means shortening of the life of natural gas.

A million dollars worth of gas is wasted every day, in homes.

A large percentage of population is dependent upon natural gas, hence its continuance important.

Reduction of pressure, an important aid in reducing gas-leakage.

Quality of service if affected at all by reasonable reductions in pressure, is improved.

Greater uniformity of results are obtainable by reasonable reductions in pressure.

Combustion of natural gas is slow, and high gas-pressure cannot be utilized.

Correct position of burners means lower gas-bills and better service.

It is easier for the company to give good service with low pressure.

Many solid top stoves with low set burners give poor service.

Wastes that ought to be prohibited:

(a) Improper adjustment of appliances, resulting in imperfect combustion.

(b) Low burners; that is, burners more than one and one-quarter inches away from the cooking vessel on cook stoves.

(c) Solid tops on cook stoves. Grid tops or skeleton lids only should be used.

(d) Use of gas in coal furnaces and stoves. Especially built gas-heating appliances, giving an efficiency of at least 75 per cent should be used.

(e) No hot-water heater should be used that gives an efficiency of less than 75 per cent.

(f) No tank heater—that is, tank with burner underneath—should be used without an outer jacket and flue connection.

(g) All daylight burning of lamps ought to be prohibited.

The prohibition of the foregoing wasteful uses of natural gas would—

(a) Greatly improve the quality of the service.

(b) Immediately convert low-pressure conditions into usable service for cooking.

(c) Cut down the needed consumption during the cold weather period, where the demand is now greater than the available supply, so as in effect to make more gas available for all.

(d) Add 15 to 20 years to the period that natural gas will be available for domestic use.

(e) Because of the greatly increased efficiencies obtained, even with decidedly higher prices per 1,000 cubic feet, would permit the domestic consumer to get the same service without a greater annual outlay of money.

(f) Permit the many small towns that are too small for the introduction of manufactured gas to have gas service for a much longer period.

People would meet with fewer disappointments if they didn't expect more than they deserve.

Automobile Safety Lessons

Lesson Outline No. 11

AUTOMOBILE LIGHTS

Modern laws on this subject now require that [illegible] minutes after sunset until 30 minutes before [illegible] in some states, no motor vehicle [illegible] be operated unless it has sufficient lights, so [illegible] and operated as to render the highway safe [illegible] the public.

The headlights should enable the driver to dis[illegible] such a person, vehicle or substantial object [illegible] 200 feet ahead. Dangerous glare or dazzle [illegible] be avoided.

Cars should display:

a. Two headlights when in motion, one on each [illegible] both lights of equal power. Head[illegible] white or tinted, never red.

b. One or two headlights when standing still. Lights should be visible at a distance of at least 500 feet.

c. One tail light, red, that is visible at a distance [illegible] 500 feet. Light should be dis[illegible] whether car is in motion or standing. [illegible] light should be at left of center, rear and illuminate number plate with a white light.

The Illuminating Engineering Society after con[illegible] and experimentation has formu[illegible] the following table of headlight intensities. [illegible] table all dangerous glare [illegible] Tests can be made [illegible] photometer where readings are [illegible] [illegible] 100 feet [illegible] candle power [illegible] read [illegible] 100 feet [illegible] states [illegible] 2000 candle power.

5. Important points are:

a. Equip headlights with proper devices to make their lights conform to the above table.

b. Install lamps whose candle power corresponds to the device used.

c. Focus lamps in reflectors according to requirements of device used.

d. Tilt headlights according to requirements of device used.

6. Many of the patented devices now on the market do not necessarily make the headlight intensities conform to the above table. When buying such devices owners should ask for a guaranty. This should state the use of lamp to be used, the size of the headlight, [illegible] adjustment required and instructions how to se[illegible] these adjustments. A home made arrangement can be devised to give satisfactory results if lens is properly covered, frosted or painted not red. If light is at the back of lens, painted upper half of lens [illegible] ahead of lens light rays or so painted lower half of lens.

7. Different devices require different sizes of bulbs. Headlight bulbs in some states are not allowed to exceed a rating of 24 candle power, in other states the maximum is 32 candle power.

8. The bulb in some headlights can be moved [illegible] adjusting a small set screw. [illegible] 25 feet away. [illegible] forward until the circle of light [illegible] visible. [illegible] The [illegible] headlight devices call for this [illegible]

9. Headlights [illegible] lamps are re[illegible] devices [illegible] adjustments [illegible] necessary. [illegible] make [illegible] ahead [illegible] 21 candle power.

man who is not ashamed of himself need not be ashamed of his early condition.—Webster

11. Always carry a spare bulb for your headlights, the same as you do a spare tire.

12. Headlight lens may loosen and rotate in the frame; inspect it frequently, adjust and tighten it if necessary.

13. Reflectors need careful attention.

a. Replace dented reflectors.

b. Replace or replate tarnished or rusted reflectors.

c. Finger prints mar surface of reflector; use soft cloth when handling.

d. When wiping reflector, use soft cloth and wipe from center outward to rim, not round and round.

14. If lens breaks, tie a paper or cloth over headlight until lens can be replaced.

(Complete sets of twelve copies of the "Safety Bulletins and Safety Lessons for Automobile Drivers can be had at cost by addressing the National Safety Council.)

PRIZE WRINKLES

THE Wrinkle Department of the Natural Gas Association of America has become an established affair. However, the upbuilding of this Department has been the outcome of hard, persistent work, the foundation and the corner-stone having been laid long since by men who earlier gave much time and patience to the work without remuneration other than the plaudits, for the time being, of those who were sufficiently thoughtful to express gratitude for the work done.

The present editors have held over for 1922, their good work having shown them well qualified as persistent workers to gather these valuable features from throughout the field.

THE NATURAL GAS INDUSTRY magazine for years has rendered unqualified service to the Association and to the editors of the Wrinkle Department, it being the only publication during that building period, that gave space to the promoting of these interests. The space given was in no wise stinted; therefore, to the editors of that department who have gone before, and to the NATURAL GAS INDUSTRY magazine much credit is due.

Now, of the present, we would simply say, the same service on the part of the NATURAL GAS INDUSTRY magazine, is at the Association's disposal.

The prizes that were offered for certain of the best "Wrinkles" presented at the convention of 1921 were alloted by the committee as follows:

OFFICE WRINKLES

First Prize—$25.00 to William Taylor, The Ma turers' Light & Heat Company, Pittsburgh, P Wrinkle No. 15—"A condensed record of av gas calculated from the first minute raise in sure after being shut in and summary result c operations."

Second Prize—$10.00 to G. R. Huggins, East Oh Co., Cleveland, Ohio, for Wrinkle No. 2—"Gua drawing table."

Third Prize—$5.00 to R. S. Cheatham, Fort Wor Company, Fort Worth, Texas, for Wrinkle No "Make friends of your customers by educating

TRANSMISSION WRINKLES

First Prize—$25.00 to T. H. Kerr, The Ohio Fue ply Company, Columbus, Ohio, for Wrinkle No "Method for using two locks so each will unfas door."

Second Prize—$10.00 to David R. Woodyard, Natural Gas and Fuel Co., Chillicothe, Ohi Wrinkle No. 7—"Inspection method for C Fulton regulators."

Third Prize—$5.00 to Engineerinig Department Ohio Gas Co., Cleveland, Ohio, for Wrinkle No "Support for railroad tracks."

PRODUCTION WRINKLES

First Prize—$25.00 to W. A. Hovis, United Natur Co., Clairmont, Pa., for Wrinkle No. 9—" machine with two pole derrick used for pulling and cleaning out wells."

Second Prize—$10.00 to B. A. Pyle, United N Gas Co., Petrolia, Pa., for Wrinkle No. 3—"F ting casing started when unscrewed and to or of hole."

AGREEMENT ON OPERATION UNDER PATENTS

THE Standard Oil Company (Indiana), ow the Burton, Humphreys, Clark and patent rights, and The Texas Company, of the Adams, Holmes-Manley and oth ent rights, all pertaining to the pressure cracking in connection with the manufacture of gasoline an petroleum products, have effected an arrangement by each has the right to operate under the patents, and whereby, under an agreed division c alties, either may license others to operate und or all of said patents. The granting of licenses to to use these patents should result in benefiti industry as a whole, and also increase the sup petroleum products essential for the use of i combustion engines.

Politeness has been well defined as benevolence in small things.—Macauley.

Natural Gasoline

Natural Gasoline as an Essential Constituent of a Good Motor Fuel

By W. M. Welch

[illegible] Trade Representative [illegible] Petroleum Association of Natural Gasoline Manufacturers

[illegible] percentage of marketers have changed from an attitude of condemnation of any motor fuel containing an appreciable amount of natural gasoline to the directly opposite attitude [illegible] admission that motor fuel is improved by [illegible]ing with the refiner's product a suitable amount [illegible]atural gasoline. This is a forward step in several [illegible]. It is a step in the direction of conserva[illegible] of manufactured appliances. I mean the automo[illegible] power unit the life of which is prolonged by the [illegible] of motor fuel resulting from the scientific [illegible] limited amounts of natural gasoline in motor [illegible]. The change of a relatively large number of [illegible] in their attitude toward natural gasoline is [illegible] evidence that this favorable development is [illegible] temporary but is deep seated.

[illegible]ough the use of natural gasoline refiners practice [illegible] read noted to meet the conditions which it is recognized, have come to stay. From 1911 when [illegible] of natural gasoline was so small as to be [illegible] until 1921 when the industry had assumed [illegible] the refiners and marketers of [illegible] could not longer ignore the bearing of natural [illegible] upon their problems of manufacturing and [illegible] the subject of its use in so-called straight run [illegible] was [illegible]. There were those who [illegible] and [illegible] and there were those [illegible] the advantage of using it and [illegible] Since 1921 the latter class which might [illegible] in the light of the present development the [illegible] class has largely disappeared. Most of [illegible] have [illegible] the advantages of the new [illegible]. There are [illegible] of natural [illegible]

[illegible]

cent gasoline, natural gasoline introduced during the process of manufacture makes a better motor fuel than would be produced in equal quantity without it.

This higher standard of quality must be met by all refiners selling their products under normal competitive conditions. There is no other way from an economic point of view to meet this competition due to quality, than by the use of natural gasoline. Without natural gasoline, quality might be secured at the prohibitive expense of quantity.

The motorist recognizes this improvement in the quick starting he gets from his gasoline on cold mornings. He recognizes it also in increased power when he drives his new car up a hill on high, and, if he is a careful automobile owner, when he has his carburetor adjusted to give him greater mileage. The distributor through the service station recognizes the improvement in his increased sales. The automotive engineer recognizes it as giving greater volatility to the motor fuel and discusses in a learned way the beneficial effect of this volatility upon the motor.

The second important point in the relationship of natural gasoline to motor fuel is that when introduced into the refinery during the process of manufacturing motor fuels it actually increases the quantity of gasoline produced from a barrel of crude. This is a well established fact and does not admit of successful denial. Natural gasoline enables the refiners to dig deeper into the crude to get his base which when mingled in the refining process with natural gasoline becomes a superior motor fuel. It is [illegible] that this increase is greater with some grades of crude than with others and it is probable [illegible] that the advantages in this direction are greater with the heavier than with the lighter crudes [illegible] the proper [illegible] the comparative [illegible]. The greatest advantage [illegible] selling relatively [illegible] refiners [illegible] [illegible] natural gasoline [illegible] [illegible] increase the quantity [illegible] and

Politeness is the art of choosing among one's real thoughts.—Stevens.

all grades of crude, irrespective of the processes used during the refining operation.

In a large eastern refinery, running mixed Pennsylvania, Oklahoma and Mexican crudes, the increase due to the use of natural gasoline was, over a definite period of observation, six per cent of the crude or thirty per cent of the gasoline yield. The amount of natural gasoline was between ten and fifteen per cent.

The third point I wish to bring out does not have to do with the improvement in quality of motor fuel nor with the increase of quantity from a given volume of crude, but pertains to the future supply of natural gasoline available to help the motor fuel situation, both qualitatively and quantitatively. The problem is one of a relatively diminishing supply. As the demand for motor fuel increases, and the quantity is increased to satisfy this demand, there will be a diminishing quantity of natural gasoline to maintain either the qualitative or quantitative function which it is now fulfilling.

When the natural gasoline industry began to develop in a practical way in the United States in about the year 1910, and in a semi-practical way several years later, there existed oil fields which had started producing crude in the early history of development, probably as early as the '70s, and other fields which had been discovered at successively later periods. By 1918 all of these older fields had been worked over, so that during the period of active expansion of natural gasoline manufacturing from 1914 to 1918 there was a very rapid increase in the amount of natural gasoline manufactured in the United States, with the Mid-Continent fields of Kansas, Oklahoma and Texas producing more than 70 per cent of the total.

The time, therefore, came when only new fields of crude production were available as a source of natural gasoline, and the high rate of increase occurring in 1916, 1917 and 1918 fell off to a very marked extent.

Perhaps twenty per cent of the total natural gasoline produced in the United States today is derived from the dry natural gas being transported through natural gas pipe-line systems from gas fields to the centres of natural gas distribution which are the cities of Pittsburgh, Cleveland, Cincinnati, Kansas City, Dallas and others. It is a known fact that the supplies of natural gas being distributed to those cities is on the decline. Whatever that rate of decline may be, there will be a corresponding rate of decline in the amount of natural gasoline produced from this general source.

Aside from the new fields which may be developed in the future, there is only one additional source of supply of natural gasoline. This is the fields from which the casing-head gas yields a gasoline content so small that under the present economic conditions it is not practicable to utilize it for natural gasoline extraction. If the economic situation should change and it should become profitable through the development or improvement of methods, it would be possible to a small extent to increase the natural gasoline production. There is, however, relatively small hope of this prospect being realized.

It is a notable fact that only the high gravity crude producing areas are the sources of considerable quantities of natural gasoline and unless an economic change takes place, this condition will continue to exist and only the fields developed in the future which produce relatively high gravity crudes will be the new future sources of natural gasoline recovery.

The conclusion must, therefore, be that, with gasoline production from dry gas declining, with all the older fields worked over and now producing larger quantities than they can be expected to produce in the future, and with only the new high gravity oil fields to be looked to for new sources of production, there will be a constantly widening gap between the supply of natural gasoline and the demand created by both the qualitative and quantitative advantages which it carries with it when scientifically used in connection with the manufacture of motor fuels.

This will be one of the problems of the future, but I am confident that the ingenuity of the engineers both of the refining and automotive industries will be able to solve it.

——By courtesy of the Petroleum Institute.

PRYING OUT NEWS

WORD comes to us from the U. G. I. in Philadelphia, that the *Public Ledger* of that city through its managing editor, recently applied for data regarding gas matters, urging that the newspapers be kept in closer touch with the gas interests and what they are doing. That again brings to the fore that which has been urged at various gas association meetings, namely, the need for constant, unremitting and, above all things, honest, straightforward statements made to local newspapers, covering the doings, difficulties, and purposes of local gas companies.

Again and again have the gas-men been told by men of experience in the magazine and newspaper fields, that what the newspapers want is not "bunk" but facts, and what the newspapers also want is to have local interests like the gas company voluntarily supply not "puffs", but straightforward legitimate news.

The newspaper has been looked upon by utilities as a "knocker." Is it surprising that such should be the case, in view of the fact that the newspapers have not been taken into the confidence of the gas company?

What the newspapers are after is legitimate news, and if those interested, namely, the gas managers do not supply such regarding their institutions their intentions, and their endeavors, garbled news formed of what the reporter or the public imagines to be, or surmises to be, the purpose, the aim, and the intent of the gas company, will surely find its way into the public press.

It is certainly a sad commentary upon the conduct of gas interests, when a newspaper managing editor should feel it necessary to solicit news and information from gas sources. A word to the wise should be sufficient.

Set not thyself to attain much rest, but much patience. Benham.

Loss By Leakage

Slackness in Carrying Out Leakage-Curtailment Measures Recommended by U. S. Government Largely Responsible for Present Tremendous Loss of Natural Gas

IN [illegible] the findings by Samuel S. Wyer of Columbus, Ohio, based on his investigation of the wastage of natural gas in 1920 in [illegible] percentage contract distributing plants in northern [illegible] supplied by the Lone Star Gas Company, the [illegible] based on tower-holder meter tests of the U. S. Bureau of Standards, among other things, reasons are [illegible] natural gas is harder to hold than is manufactured gas. These reasons are as follows:

Natural gas, not containing condensable constituents, [illegible] tarry nature, does not tend to stop up [illegible] pin holes through which dry gas, like natural gas, will go, but which a wet gas, like manufactured gas, would very shortly fill up.

Natural gas distributing pressures have been [illegible] much higher than those used for manufactured gas. This of course, has materially increased the leakage.

Natural gas being dry and having a marked affinity [illegible] moisture, when it does get out of the pipe immediately draws the moisture from the soil, making the soil [illegible] and powdery, thereby increasing the ease with which the natural gas can quickly work its way out to the surface, whereas with manufactured gas the tendency would be to make the soil wetter and, therefore, the soil would offer a greater resistance to the gas flow and [illegible] the leakage tendency.

[illegible] upon the legal standard for gas leakage the following statement is made:

[illegible] most exhaustive industrial investigation that has ever been made of the gas leakage operating conditions, [illegible] by Judge [illegible] of the United States District [illegible] with the Kansas Natural Gas Company [illegible] distributing plants. [illegible] showed clearly that in good manufactured gas [illegible] the leakage would be [illegible] normal [illegible] M [illegible] per [illegible]

[illegible] the [illegible] natural gas [illegible] Southwestern [illegible] Company [illegible] that a [illegible] leakage of 30 M [illegible] per [illegible]

The standard of 30,000 cubic feet per mile of three-inch main per annum is a reasonable and attainable standard according to testimony given upon the hearing by expert engineers of high standing both those called on behalf of the distributing companies and those called on behalf of the Court of Industrial Relations. It may be true that a more wasteful standard would result in better financial results to the distributing companies and it may also be true that if the matter were left to the distributing companies themselves they would continue a more wasteful standard.

This change in the standard of leakage is for the purpose of conservation and the consumers are as a matter of fact more interested in conservation than the distributing companies. When natural gas is exhausted the companies will be distributing manufactured gas and will be getting presumably a reasonable return for so doing so that the change will be of comparatively little moment to them, but when natural gas is exhausted the consumers will suffer a distinct loss which will never be recovered. The consumers therefore are vitally interested in conserving the natural gas as far as possible. The saving is entirely for their benefit.

Economic Leakage in the Distributing Plants

[illegible] among the legal standard laid down in the preceding section, the permissible leakage in M cubic feet per annum in various distributing groups would be:

	M cu ft
[illegible] Gas Company	[illegible]
Dallas Gas Company	[illegible]
[illegible]	[illegible]
[illegible]	[illegible]
Total	[illegible]

[illegible] estimates normal [illegible] per [illegible]

[illegible]

Opportunity makes us known to others, but more to ourselves. La Rochefoucauld.

The natural gas wasted has a higher heating value than the manufactured gas and the above excessive waste would be equivalent in manufactured gas to.....4,000,000

The average price of manufactured gas in the State of Texas is $1.30 per "M." The money value of the excessive natural gas waste in these distributing plants is, therefore, $5,200,000.

Referring to percentage contracts, the statement is made that such are "vicious."

"The vicious features of the percentage contracts, used for selling gas to certain distributing companies, are not in the fact that the gas is sold by the local distributing company on a mere percentage of the total receipts through the ultimate consumer's meter, but in the fact that the Lone Star Gas Company must—

First, stand all of the leakage of the local distributing plants, and

Secondly, that this places no incentive whatever on the local distributing companies to keep their plants tight.

This percentage contract situation is the major reason for the deplorable leakage conditions that now exist in many of your distributing plants selling natural gas on a percentage basis. That is, because of these percentage contracts a premium is actually placed on inefficient operation, and the local distributing plant is so operated as to actually stimulate a wanton waste of a limited natural resource, and in so doing not only greatly injures the public but materially shortens the serving time of the Lone Star Gas Company.

'Where percentage contracts are in use, the following invariably will happen:

(a) Collections by the local distributing company will not be as carefully looked after as when the local distributing company is entirely responsible for and the sole loser of unpaid bills.

(b) The waste in leakage will always be much greater than where there is a definite responsibility. Most natural gas distributors fail to appreciate that constant vigilance is the price of a tight natural gas plant, and if they are not responsible for the tightness of their plant little or no vigilance will be exercised in curtailing leakage.

Much has been said about the sacredness of contracts, without appreciating that there can be no vested right to do a moral wrong. These percentage contracts are not private contracts, but are public contracts in which the public has a vital interest, and when one recklessly, defiantly, persistently and continuously wastes natural gas, and boldly declares his purpose to continue to do so, he ought not to complain of being branded as the enemy of mankind.'

To hold that this natural gas waste situation cannot be corrected—because of contracts—is to hold that two utilities can barter away their plain public utility obligations to the public. Such a condition cannot be tolerated by society. The broad public interest in the use and conservation of natural resources has become more important than indivdiual private interests. The foolish waste of one's substance, especially if that substance is a natural resource like natural gas, is one in which the public itself is directly concerned.

The fire and explosion hazards existing in the towns because of this excessive leakage of gas would alone justify intervention on the part of the public.

The objectionable percentage contracts ought, therefore, to be abrogated at once. If you cannot agree with the distributing companies and have an immediate abrogation and rational readjustment, then the State should step in and declare that the contracts are against public policy and should void them in the interest of the public."

It is regrettable that the United States Government recommendations for waste-gas-curtailment are not carried out, for if they were, far better conditions would at once be resultant. The report says of this matter:

"This deplorable distributing plant waste situation is not merely a recent development. As early as 1918 the U. S. Fuel Administration was in possession of enough information to determine the magnitude of the then abnormal leakage situation. The distributing companies were notified of this condition, but did not carry out the recommendations.

The National Committee on Natural Gas Conservation, in the resolutions adopted at the U. S. Bureau of Mines in Washington, D. C., June 11, 1920, called particular attention to the necessity of use of measuring devices, that percentage contracts for retailing gas should be against public policy and that distributing pressures should be lower and more uniform. The U. S. Bureau of Mines, in November, 1920, urged the State of Texas and its public officials to carry out these recommendations in the interest of the public, but nothing has been done. The U. S. Bureau of Standards, on July 20, 1921, issued a statement on "How to Get Better Service With Less Natural Gas in Domestic Gas Appliances" and the distributing companies were urged not only to carry out these recommendations, but to get this governmental information to their consumers. This also has not been done. This information would be of great value to the gas consuming public in showing how to cope with the inevitable low gas pressure situation which must be faced during the cold weather this winter, and would bring out that usable service can be secured with even extremely low pressures if gas is properly used."

The report states that leakage conditions were found exceptionally bad in certain instances. "At one point 15 joints of pipe had been removed from an old line, and each joint was full of holes. Several of these joints contained more than twenty-five holes apiece, the holes indicating grossly wasteful operating conditions, flames from six inches to three feet long could be secured by lighting the escaping gas that was coming up through the undisturbed soil, and through bar holes."

A report of Hon. Wilbur F. Booth, Judge, District Court of the United States, makes the following statement regarding the effect of pressure on gas leakage:

One's piety is best displayed in his pursuits.—Alcott.

The quantity of leakage through a given opening under different pressure conditions, will vary directly as the square roots of the pressures. That is, the leakage tendencies at 4 oz. and 1 oz. will be as the square root of 4 is to the square root of 1 or as 2 is to 1. That is, mathematically the leakage at 1 oz. will be only one half that of 4 oz. However, as natural gas pipes are buried under the ground the soil resistances at low pressures, in the neighborhood of 2 oz. and lower, will be so great as to seriously impede the flow of escaping gas, and for this reason the leakage at 1 oz. will be less than the mathematical relationship.

The pressure carried in the distributing plants are too high for good service or for efficient leakage operation. The lowering of the pressure to about 2 oz. in the distributing plants would not only curtail the leakage but would materially improve the quality of the service.

Touching upon the method of reporting the leakage of natural gas in a gas distributing plant the statement is made that:

"The leakage should be reported in terms of 1,000 cubic feet of gas lost per annum per mile equivalent three inch pipe. Sizes other than three-inch to be converted to three inch by multiplying by the ratio of the respective diameters, that is one mile of six inch would be equivalent to two miles of three inch and one mile of one and one half inch would be equivalent to one-half mile of three inch."

If one were able to correctly multiply present losses in terms of 1,000 cubic feet per mile of three inch pipe, have the figures would be astounding, and, no doubt, some action would be taken to see that present laws are enforced. How much better would it be, were the consumers of the industry at large listened to.

NATURAL GAS APPLIANCES

SINCE the consuming of natural gas is rapidly departing from the stage of excessive wastefulness, every effort should be made on the part of the gas man to fully advise himself, how efficiency may be increased and wastefulness diminished.

No time should be lost on the part of gas interests in acquainting the foregoing, and the gas man having himself up to the limit with knowledge and appearances of the situation should [illegible] the public what he himself has learned.

The gas man should himself be [illegible] that a reduction in pressure is desirable [illegible] to educate his public along the same [illegible]. There would certainly be [illegible] pressure to two ounces (5.5 inches) or even less [illegible] experiment and demonstration shows that the quality of service is not thereby impaired but, on the contrary, very much improved, if proper adjustments in appliances are made at the time that the pressure is reduced.

It is true that with many natural gas appliances, as they are at present adjusted with the burner two and one half inches or more from the utensils, which makes it necessary to burn a large quantity of gas to get good service, a high pressure is necessary to inject enough primary air into the burner to prevent a smoky luminous flame which blackens the utensils. Investigations made by the Ohio State University, Department of Agriculture, Bureau of Mines, and Bureau of Standards show that when burners are two and one half inches from the utensil they are very inefficient and therefore wasteful. The cost of raising the burners is but a small sum compared to the saving that can be accomplished. It should not be argued that high gas pressure and low set burners should be continued merely to enable the careless user to have service.

The same statements embrace the following relating to the combustion of natural gas:

The combustion of natural gas is very much slower than that of artificial gas, and it has been noticed by every user of natural gas that when the gas pressure is high there is a tendency for the flames to leave the ports of the burner. This is especially true if the air shutter is left open. With an average burner operated at four ounces (7.0 inches) pressure it is necessary to have the air shutter of the burner practically closed. If the pressure is reduced to two ounces (3.5 inches) the size of the gas orifice must be slightly increased to give the same gas rate, and the air shutter must be opened a little more to secure a good flame. We have [illegible] the same burners one operated at four ounces and the other at two ounces pressure, the same [illegible] gas entering the burner, the same [illegible] leaving the burner resulting in exactly the same appearance of flame in both cases. The efficiency [illegible] should be practically the same when [illegible] a great many [illegible] that are [illegible] that equal cooking is wasted [illegible] gas [illegible] there can be [illegible] a higher pressure.

[illegible] regarding the [illegible] as follows:

"If the standard size natural-gas burners are placed properly (within about an inch of the utensil) a consumption of about six cubic feet per hour is sufficient to give the speed required for all ordinary cooking operations and much gas will be saved that otherwise would be wasted. With this gas rate almost any burner can be easily adjusted to burn gas with a good flame with pressures even lower than two ounces. With the present low-set natural gas burners the service is greatly impaired if the pressure drops from four to two ounces, assuming that the burner was designed and adjusted for four ounces pressure. The advantage of being able to operate a raised burner designed for two ounces pressure is that the service is not appreciably affected until the pressure drops below one ounce."

One desiring the Bureau's complete circular treating upon these matters should send to the Bureau of Standards for Circular No. 116, while those wishing further to advise themselves should apply to the Bureau of Mines for technical paper 257, entitled, "Waste and Correct Use of Natural Gas in the Home."

ZANESVILLE, A STAR

THE people of Zanesville, Ohio, have shown themselves head and shoulders above the peoples in many another city who have failed to evince a breadth of vision sufficient to grasp the fact that where a gas company cannot successfully operate under a current rate, that an advance in rate is to the direct benefit of the public of the city, even though it be likewise of benefit to the corporation. Zanesville, Ohio, gave a majority of 2,494 when voting upon an ordinance to raise the rate for gas per thousand cubic feet, gas supplied by the Ohio Fuel Supply Company.

A municipal election was held in November, and opportunity was grasped at that time to place before the citizens of Zanesville, the question shall the rate for gas be increased 10 cents per thousand cubic feet. Instead of a landslide of "no's" there was a landslide in exactly the opposite dirtcion.

By many it was not supposed possible to have the ordinance ratified; by others it was thought that there might be a small majority, but when it was announced that 2,494 represented the majority in favor of the ordinance, even a daily newspaper of the city took advantage of the opportunity through its columns to congratulate the Chamber of Commerce, which did excellent work looking to the saving of natural gas for Zanesville. through an ordinance that should pay the gas company sufficiently well to make a supply a certainty.

The plan of the Chamber of Commerce was the establishing of an open forum, thus it was that the matter was fully and well discussed prior to election day. The thought comes to us,—would it not be well whether the gas-rate were or were not to be changed, to induce the Chamber of Commerce in many of our cities, to institute a forum for the discussion of the gas situation in the local city. Thus bringing gas to the forefront, and at the same time accomplishing expressions from the people that would be helpful to the gas-man, and expressions from the gas-man that would create a better understanding on the part of the public.

We believe forums of this nature in a vast number of our gas-served cities would accomplish much.

A LIFE OF USEFULNESS

HOW absolutely wrong one is who says that the copies of a magazine are a "Passing Show." We are brought right up against the fallacy of any such idea or statement, by a paragraph in a letter received this morning from one who is about to place a manufactured article upon the market in the gas-field. He says, "Enclosed find $2.00 for one year's subscription to the 'Gas Industry Magazine.' I have just happened to see one of your 1914 issues, and was surprised at the information to be received from your valuable publication."

In the instance we have cited, it so happens that the individual is of the appliance side of the field, but why not anticipate that manufacturers who advertised in the GAS INDUSTRY Magazine of 1914 may yet be receiving in 1922 returns from their early advertising after like manner?

Only a matter of a few days since, we received a letter from a gas company desiring information regarding an article that appeared in 1905 in an issue of our magazine, THE GAS INDUSTRY, then entitled, "Light."

Could there possibly be better evidence of lasting service? Is it likely that the circulars and folders and other like indirect, though sometimes termed *direct* publicity—products of 1905 and 1914, are still in existence, and are still rendering service? HARDLY!

FIFTY CENTS NET

THE Manufacturers Light & Heat Company desires to give its customers who pay on time a rate of fifty cents per thousand cubic feet net. This is slightly above a former rate, at the same time the discount for cash is larger than formerly, thus the consumer while being charged more, is given to understand that the company does not intend to keep all of the increase. A revision of the company's schedule has been placed in the hands of the Public Service Commission of the state, the intent being to divide the company's service into districts, two in number in western Pennsylvania one district to be termed Newcastle, the other District No. 2.

The man who decides to hold off until things improve may find when things improve that the man who held on and helped them to improve is so far ahead that he can't be caught.—*Vision.*

We know what we are, but know not what we may be. Shakespeare.

About Oil Camps

U. S. Government Bulletin Contains Valuable Advice on Oil Camp Sanitation

IN a recent Bulletin issued by the Department of the Interior, Bureau of Mines, the subject of sanitation in drilling camps is treated very thoroughly, the situation being viewed from many angles. Describing boom communities, the following adverse conditions are cited, conditions that are [illegible] in many oil and gas camps during the first finding of these products.

[illegible] water supply, or an inadequate one, accumulation of garbage, decaying vegetable matter, tin cans, [illegible] etc. The foregoing are strewn promiscuously [illegible] and are not only breeders of sickness through putrefaction but likewise through flies carrying [illegible] on their feet and bodies from [illegible] putrefaction to the cooking shacks and [illegible] utensils.

[illegible] about and seeking with carrying elsewhere the results of these conditions while the acres [illegible] detailed.

[illegible] epidemics are the only [illegible] of better conditions [illegible] the conditions of filth generally continue [illegible] or at least diminished only to a small extent.

[illegible] in the Bulletin referred to, that the [illegible] for the betterment of such conditions [illegible] the state government, and that [illegible] matter in the community where [illegible] time for the correcting [illegible] and in enforcing religious [illegible]

[illegible]

[illegible] $1,875 per month or $18,000 a year. From the first year's saving it would be necessary, of course, to deduct the total cost of all sanitary installations, [illegible] this expense should not exceed $1,000.

As these are conditions of importance they should, as far as possible, be done away with, and the following means are suggested:

FLIES.

[illegible] following measures flies may not be eliminated [illegible] travel far and may arrive from [illegible] where their breeding places [illegible] such precautions [illegible] greatly reduce their number.

[illegible] a distance may be caught in properly constructed traps, as they offer the [illegible] breeding places. [illegible] the Department of Health [illegible] the author describes [illegible] effective trap which he has seen [illegible]

[illegible] trap [illegible] at the ends of a sugar barrel [illegible] a sheet of wire into circular [illegible] the diameter of the barrel. Next divide the netting [illegible] straight through the [illegible] being [illegible] the edges secure [illegible] the left over [illegible] the point [illegible] half inch in diameter [illegible] sugar [illegible]

Nothing is more unjust or capricious than public opinion. Hazlitt

To empty the trap, pour boiling water in from the top. When the flies have been killed, remove the top screen and dump the trap.

The premises must be kept clean or the flies will not be attracted to the traps.

FLY BAITS.

Interesting tests on the relative effectiveness of fly baits is given in War Department Document 897, Notes on sanitary appliances, April, 1919, page 28. The following baits are suggested:

The total number of flies caught was 43,005. Of these 35,642, or 82.88 per cent, were house flies. The blue-bottles numbered 4,444, or 10.33 per cent, and the horse-flies 1,732, or 4.03 per cent.

The baits in the order of their efficiency and in their catches were as follows:

It is thus seen that of the 15 different baits used only 4 seemed to be really efficient, namely:

1. Fish heads and fish scraps.
2. Overripe banana with sour milk.
3. Bran mixture No. 2: Bran 2 pounds, corn meal 1 pound, syrup ¾ pound, water 3 pints.
4. Salmon, in cans, with perforated top.

All of these baits fulfill requirements Nos. 1 and 2 of an efficient bait, but the fish baits fall down on the third requirement, viz, that the bait used shall not constitute a nuisance. The older the fish baits got and the more abhorrent their odor the more efficient they seemed to be.

The four most efficient baits included two of the putrefactive and two of the fermentative type. The odor given off by the latter is pleasant rather than otherwise. While the percentages given have all referred to the house fly, it may be stated that the two fermented baits were the most efficient as far as the blue-bottle and horseflies were concerned.

It seems to be necessary for a bait to have either a fermentative or putrefactive odor to be efficient.

1. Beef liver, in cans, with perforated tops.
2. Mashed cheese and molasses.
3. Sweet corn, in cans, with perforated tops.
4. Fermented canned corn.
5. Molasses, water and vinegar.
6. Milk, water and bread.
7. Bevo, water and bread.
8. Ripe bananas, split longitudinally.
9. Garbage, fermented with yeast.
10. Fermented canned plums.
11. Canned salmon, in cans, with perforated tops.
12. Overripe banana and milk.
13. Fish heads and fish scraps.
14. Bran mixture No. 1: Bran 3 pounds, constarch 1½ pounds, sugar 3 pounds, yeast 4 cakes, water to 5 gallons.
15. Bran mixture No. 2: Bran 2 pounds, corn meal 1 pound, syrup ¾ pound, water 3 pints.

Note.—The bran mixtures were allowed to ferment before use.

	Per cent of total catch
	Per cent of total catch
Fish heads and fish scraps	21.34
Overripe banana and milk	21.30
Bran mixture No. 2	20.72
Canned salmon, perforated top	14.95
Fermented canned plums	7.52
Bran mixture No. 1	5.29
Garbage fermented with yeast	2.25
Ripe bananas split longitudinally	1.83
Bevo, water and bread	1.58
Milk, water and bread	1.26
Molasses, water and vinegar	.99
Fermented canned corn	.63
Sweet corn in cans	.13
Mashed cheese and molasses	.10
Beef liver, in cans	.05

Regarding the mosquito nuisance, which should not be mentioned as such, but should be designated as "a menace," the following is stated:

MOSQUITOES.

Some varieties of mosquitoes are carriers of disease, including malaria and yellow fever. The female of one variety, Anopheles, can acquire malarial parasites by biting a person who has them in his blood and can inject them into other persons whom she later bites, thereby spreading the disease.

Mosquitoes breed in stagnant, preferably dirty, pools. The females of some varieties lay eggs one at a time; the females of other varieties as many as 300 at a time, which float on the surface of the water in the form of a raft an eighth of an inch or more in length, that can readily be seen with the naked eye. In about two days the eggs hatch and form the larvæ or "wrigglers," to be seen so frequently in rain barrels. The larvæ breathe air through a tube a little to one side of one extremity. If their air supply is cut off they die. In about a week each larva changes into a chrysalis from which about two days later the mosquito emerges.

Mosquitoes can be destroyed by draining or treating the places where water collects. Old tin cans, bottles, or any waste vessels that will hold water should be removed or destroyed. Tubs and barrels used to store water for domestic purposes should be kept covered so that mosquitoes can not enter to lay eggs. Holes in trees or stumps, roadside puddles, and depressions in rocks should be filled. Ditches should be kept clean so as to permit a free passage of water through them. Edges of pools should be kept free from grass, and marshes should be drained. Where draining is not practical, stagnant water should be sprayed at frequent intervals with kerosene or crude oil. The oil forms a scum on the surface of the water and prevents the larvæ from getting air. Large pools may be stocked with fish, which feed on the larvæ.

As a rule, however, mosquitoes are not a menace to an oil camp, because sooner or later oil accumulates on practically all of the stagnant water about the camp.

As we hope that the year 1922 will be productive of various new pools being discovered in oil fields, or pockets in gas fields, where camps will grow up and perhaps form the nucleus of future villages, it would seem timely to mention the subject of the location of camps, and regarding this phase the Department's statements are as follows:

Try and be right as well as sincere. Haweis.

LOCATION OF CAMPS

A camp should be on well drained ground. Even though it be necessary for the men to walk a short distance to and from work, this rule should be followed. The living quarters, kitchen, and commissary houses should be on the higher ground, with the stables, corrals and chicken pens on the lower, so that surface drainage will be always from the former toward the latter.

Until success in drilling has determined that the camp is to be permanent, temporary bunk houses on the plan of the smaller cantonment buildings recently used by the United States Army should be satisfactory. It is well to arrange the houses in accordance with modern town planning, as this will add greatly to the appearance of the camp and will facilitate keeping it clean. If there is any prospect that the camp will become permanent, trees (unless they are already on the site and can be cleared to harmonize with the surroundings) should be planted in neat rows about the buildings, and every encouragement should be given employees to plant lawns and gardens.

Toilets, if the pit type is used, should if possible be at least 50 feet to the rear of the houses. However, in the writer's opinion, this type of toilet or any other that does not preclude the possibility of flies coming in contact with the excrement before it can be properly disposed of is dangerous. No matter what efforts are made to screen such toilets and keep them fly proof, it is only a matter of time until the high checking of the boards or carelessness of the users, flies are admitted and become a menace to the health of everyone about the camp. If the camp is of such a temporary nature that the use of privies seems advisable, the danger from them should never be overlooked, and they should be built and kept fly proof.

A removable receptacle privy consists usually of a suitable water tight receptacle, incased in a substantially built fly tight wooden box, which serves as a seat. The hole in the top of this box is covered with a hinged lid and the pit is usually screened to provide proper ventilation. The lid is also arranged to drop in place by its own weight when the privy is not in use. Either the top or the front of the box is also hinged to permit the removal and cleaning of the receptacle.

This type of sewage disposal is recommended by some authorities as preferable to the open back privy. The success of such a system depends on a constant care as regards emptying and cleaning of the receptacle and keeping the box fly proof are absolutely necessary. If not properly constructed and cared for, after a few months of service the lid of the box may warp and not close well over the hole, the box may crack or the flies may get so that flies have a separation's free entrance and protection against the spread of contagion is no better than with the ordinary privy. If properly given the proper care this system has been and is rendering good service in many places.

[illegible]

Other sanitary closets are now being placed on the market by certain manufacturers and are well worth adoption. The bulletin of the Kansas State Board of Health, August, 1918, gives a description and opinion of this kind of sewage disposal.

CESSPOOLS

In the past it has been the practice at permanent camps and in many small cities and towns to convey sewage by a water carriage system into a cesspool, because the cesspool was covered up and so far from the buildings that the noxious gases did not become a nuisance. It was supposed that the sewage was being disposed of properly.

Undoubtedly there are places where this system properly disposes of the sewage, but in the author's opinion such places are the exception, as the successful operation of a cesspool depends on septic action. To insure septic action the surface of the water in the pool should remain at practically a constant height, that is, the water should seep into the soil at the same rate it enters the pool. This, of course, is seldom possible. On wash days, for example, there may be an influx of water that will almost fill the cesspool. When the water recedes, the scum of bacteria and excreta on the surface will stick to the walls of the excavation and if the cesspool is not properly covered it will, like the open privy, afford a breeding place for flies. When the sewer system is not in use, as during the vacation of buildings, all the water may seep out of the cesspool and the scum of excreta and bacteria left behind may cover the bottom as well as the sides. Repeated occurrences of this kind may so affect the porosity of the soil that the water will cease to percolate through it, with the result that the pool overflows and becomes a positive danger to everyone living in the vicinity. Any type of sewage disposal that does not preclude the possibility of flies coming in contact with the excreta or other waste material is unsatisfactory.

[illegible] Bureau of Mines for Technical Paper No. [illegible]

WATER HEATING

A [illegible] concerning the heating [illegible] has been carried on by the Kansas State Agricultural College at Manhattan. [illegible] investigation was [illegible] the cost of coal [illegible] water heaters.

1. [illegible] supplying hot water [illegible] water for a single [illegible]

2. [illegible] operate the heater [illegible] water [illegible] given a [illegible]

3. [illegible] heater [illegible]

[illegible] water [illegible]

[illegible] 19[illegible]

All men commend patience, although few be willing to practise it.—Kempis.

Kerosene	37%
Gasoline	40%
Manufactured gas	60%—67%
Electric	81%—97%

For a family of three for general domestic purposes, bath and laundry where the range boilers are well insulated, the following will apply:

Fuel per month	Quantity per month	Cost per month
Soft coal ($8.00 per ton)	300 lbs.	$1.20
Kerosene (one burner, 15c per gallon)	15¾ gal.	2.36
Gasoline (20c per gallon)	19 gal.	3.80
Gas (automatic-type heater, $1.25 per 1,000 cu. ft.)	2,700 cu. ft.	3 38*
Electric (circulation, immersion or direct-contact type, 750-watt, at 2c per kw. hour)		7.50

Tests of the pilot on automatic gas water heaters showed consumptions of from 34 to 127 cubic feet per day.

"The advantage gained by covering range boiler tanks is evident from these results. A covering of asbestos cement to a thickness of about three-fourths of an inch reduces the losses 26 per cent. A range boiler tank cover, consisting of an inner lining of asbestos paper, a filling of ½-inch hair felt, and an outer cover of canvas, reduces the losses 60.7 per cent. A covering consisting of asbestos paper and ¾-inch hair felt, held to the top and sides of the tank by a wrapping of white muslin, reduced the losses 71 per cent."

The foot-note from the pen of Mr. S. S. Wyer will be of especial interest to natural gas companies, especially since natural gas was not included in the schedule of tests made by the Agricultural College, and likewise because statements of Mr. Wyer are based upon a full and complete knowledge of conditions in the natural gas field, Mr. Wyer having long served in this field with every possible detail at his command.

While Mr. Wyer's conclusions are always very definite and direct, as are likewise his statements, we consider them always based upon composite data, conclusions not being reached from any one angle. Mr. Wyer's statements and conclusions sometimes strike quite severely at one or another interest, but we believe them to be founded upon a desire on his part to be just to all concerned, let the axe hit where it may.

*Note by S. S. Wyer—Since natural gas has twice the heating energy of manufactured gas, one-half the volume would have done the same work. If the gas cost had been 50c per "M", the monthly fuel cost would have been $0.67.

Facts About McKeesport

Samuel S. Wyer, of Columbus, Ohio, forwards the following data regarding the decline of the natural gas pool at McKeesport, Pa., a pool that presented one of the greatest pyrotechnic displays in the recent history of natural gas. It produced probably the best paying gas well in the world, and yet soon took to the toboggan, and slid rapidly as a money producing pool, to the valley of losses far below.—*Editor's Note.* Mr. Wyer's deductions are as follows:

McKeesport Natural Gas Rainbow

THE McKeesport gas pool, 15 miles southeast of Pittsburgh, has been the most exploited natural gas field that has ever been developed. The original Foster well—probably the best paying gas well in the world—was "drilled in" August 23, 1919, and turned into the People's Natural Gas Company's main line six days later. Since the field was located close to existing lines, little gas was wasted in getting this and succeeding wells connected.

The unusual success of the first well resulted in a wild scramble for leases and concentrated drilling sites and produced such unwarranted drilling operations that up to October 1, 1921, 608 wells have been drilled of which 429 were dry or abandoned and only 129 producing.

From September, 1919, to September, 1921, the average daily deliveries per well declined from 31,200 "M" cubic feet to 35 "M" cubic feet—of which 17 "M" cubic feet was from the original well—the rock pressure declined from 1,400 pounds to a few pounds, and the producing wells increasing to a maximum of 185, September, 1920, declined to 129, September, 1921.

Up to October 1, 1921, the total production from the pool has been:

Entire pool	18,295,773 "M" cu. ft.
Original well	5,750,709 "M" cu. ft.

At 16c per "M", this would mean an income of less than $3,000,000. Considering the enormous profits made by promoters and stock sellers and the exhorbitant prices paid for leases and drilling operations, probably $25,000,000 of actual cash contributed, primarily by small stock holders, has gone into the field. The capital loss, therefore, will be great and instead of the investors finding the pot of gold, in this natural gas venture, they must stand a loss of more than $20,000,000.

Why Money Was Lost

This was due, primarily, to lack of appreciation of the following:

The open flow of natural gas wells, that is, total volume that will be discharged into the open air with no back pressure other than atmospheric resistance, is always

Order is man's greatest need, and his true well-being.—Amiel.

much larger than—usually about four times—the actual average delivering capacity into a line and is always expressed in cubic feet, whereas, gas is always sold in "1,000"—abbreviated "M"—cubic feet. The open flow figure in cubic feet is the one always given to the newspapers and the investing public because it looks large, but the return must be made on the marketing unit which is 1,000 times smaller so that, for instance, a 1,000,000 cubic foot open flow well could have only 1,000 marketing units and would average only 250.

There is no regeneration, when the gas is used, it is gone. A fixed amount was compressed by nature into an underground reservoir and as the gas is removed the pressure must decline and the delivering capacity of the wells will go down with the decline in pressure.

Excessive drilling resulted in an enormous waste of money—although very little gas was wasted—since more than 600 wells were drilled where 10 would have been ample to ultimately secure the entire output in the underground pool.

Except for the man making the first lucky strike, the natural gas industry is not generally profitable, nor the gold mine the public have been led to believe it was. Natural gas is, primarily, a by-product in the search for oil, when oil is not found, the natural gas operations alone are usually unprofitable. In fact, if it were not for the gambling spirit in petroleum operations, most natural gas pools would not have been found. This is an unfortunate condition from a public viewpoint because in order to maintain continuity of service and supplement residue supplies still remaining, it is necessary to be continually hunting for new supplies and the bitter experience of this McKeesport Field tends to retard such prospecting.

——Based on data from the Bureau of Topographic and Geological Survey of the Commonwealth of Pennsylvania.

REGARDING PETROLEUM

PRESIDENT Thomas A. O'Donnell of the American Petroleum Institute, in a very excellent address, interjected the following, which items should be brought to the fore:

"I think I can speak for the entire petroleum industry of this country when I say to our President: 'May God be with you in your effort to curtail the senseless competition in armament now going on throughout the world.' We will gladly forego any possibility of profits to the industry in supplying our navy with its fuel oil, but in the event that the rest of the world is not prepared to join us heartily in accomplishing the purpose, our first line of national defense will continue to be our navy."

Regarding the slowness of the process of exhaustion, Mr. O'Donnell stated that the exhaustion of petroleum is a much slower process than generally understood by those not familiar with the business. "Although new pools under high pressure and large production per well constitute a very important factor in supplying the constantly increasing demands occurring in the past, the very foundation, however, of the stability of the petroleum industry of this country is largely due to settled production of the old wells not subject to the violent decrease in production of new wells.

"It is not surprising that the general public is apprehensive as to the future supply when we take into consideration that in the press of the day, reports are constantly being made of oil gushers with a capacity of ten to twenty thousand barrels per day and then a short time afterward these same wells are found to be producing a comparatively small quantity of oil. The facts are that the general average daily production per well in the entire United States is about four and seven-tenths barrels per well, and, as the years pass and the old wells of small production accumulate they add increasing stability to the petroleum industry on a large scale . . . We have many thousands of wells producing oil which, in the aggregate, form an important part of our supply that have, in many instances, been constant producers for periods of over forty years."

Mr. O'Donnell considers as unreasonable the frequent statements that our petroleum resources will be exhausted within twenty years or less, and cites approximately 275,000 producing wells in this country with a history of the stability of the small well for the past fifty years, and the constant discovery of new pools of great importance.

"I believe," said Mr. O'Donnell, "that the petroleum resources of the world have hardly been scratched and that a free open-door policy with unrestricted opportunity for all people to prospect and develop in any part of the world to which their notion might direct their efforts would result in the production of sufficient oil to meet the requirements of all useful purposes to which it might be subjected for many generations.

"Unfortunately," said Mr. O'Donnell, "there has been a world-wide tendency by all governments to regulate, direct, and restrict the petroleum operator in his efforts. A statement of an English statesman to the effect that 'business organized by Government and supported by political action is destructive and dangerous,' applied to petroleum and its future to a greater extent, in my judgment, than any other line of development now taking place in the world."

The address from which we have quoted was delivered at the second annual meeting of the American Petroleum Institute, recently held in Chicago. The sessions were excellently well attended; the speakers were chosen from among those far up in the industry. The program embodied the following:

"The Current Year in the Petroleum Industry," Walter C. Teagle, president, Standard Oil Company (New Jersey).

"Co-operative Competition vs. Combination," Judge Edwin B. Parker, general counsel, The Texas Company.

"The Mid-Continent Refiner," D. W. Moffit, vice-president, Cosden & Co.

"European Conditions and Outlook," Edward Prizer, president, Vacuum Oil Company.

"Mexico," by Edward L. Doheny, president, Pan-American Petroleum & Transport Company.

For one man who can stand prosperity there are a hundred that will stand adversity.—Carlyle.

"Oil Production During the Past Year and a Glimpse of the Future," by Frank Haskell.

"Impressions of an Independent Operator," by J. D. Collett.

"Industrial Relations," by H. F. Perkins.

"The Automotive Industry and Oil," by Harry L. Horning.

"Oil—the Law of Supply and Demand," by R. L. Welch.

"Limitations Imposed on Economy by Volatility Changes in Motor Fuel," by F. C. Mock.

"Practical Effects of Too Low Volatility," by O. C. Berry.

"Relationship of Natural Gasoline to the Motor Fuel Problem, by W. M. Welch.

"Value of Research to the Petroleum Industry," general discussion.

"The Relation of Supplies to the Petroleum Industry," Louis C. Sands, vice-president, Oil Well Supply Company.

"Co-operation of Federal Government in Discovery and Production of Petroleum," Hon. Edward C. Finney, first assistant secretary, Department of Interior.

"General Business Conditions in the United States," Harry A. Wheeler, vice-president, Union Trust Company (Chicago) and formerly president, Chamber of Commerce of the United States.

"Looking Ahead," Harry F. Sinclair, chairman of board, Sinclair Consolidated Oil Corporation.

"Some Things We Might Be Doing," Henry L. Doherty, president, Cities Service Company.

"Reminiscences," J. C. Donnell, president, Ohio Oil Company.

"As John Bull Views It," Sir John Cadman, formerly His Majesty's Petroleum Executive.

"World Highways of Trade," A. C. Bedford, chairman of board, Standard Oil Company (New Jersey).

Standardization of Field Equipment

By J. R. STOCKTON

Since the processes involved are so similar in field practice as applied to oil and natural gas, this address of J. R. Stockton before the American Petroleum Institute has a direct bearing upon matters pertaining to gas country supplies and their standardization.—Editor's Note.

THE oil producing business is rather strikingly an individualistic business. From the day a man takes his first wildcat lease he gets the attitude of "To thunder with the other fellow; I must get mine while the getting is good." How strong this tendency is is best evidenced by the trials and tribulations of the mutual benefit associations among oil producers. The same spirit has seemingly, and naturally, passed to the manufacturers of oil well supplies, tools and equipment. The lines of machinery and equipment made by the various companies have been developed very largely for individual merit with little or no apparent effort at standardization or regard for the customer.

True, some standardization, or approximation to it, has been developed in the industry, but it has grown in a haphazard way with no broad plan, no study of engineering soundness, with no goal beyond the expediency of the moment, no investigation of other possibilities, little or no co-operation between manufacturers and between manufacturer and user, no guidance, no leadership. Such standardization must, of necessity, be fragmentary as relates to the industry as a whole and incomplete within the items affected. Recent supply catalogues announce a standard cable tool joint, or rather that such joints are nominally standardized, but they qualify this with the statement that these joints differ as between various manufacturers. In other words, a purely nominal standardization. These and other manufacturers have made some sporadic attempts at standardization, but these have largely been confined to standardization within their own product and the endeavor to induce operators to standardize on the use of the materials of that particular manufacturer.

I am told that one company recently held a conference of its representatives at an expense of over $60,000 solely for standardization with its own line. And in talking rig iron standardization the other day with a salesman for one concern, I was informed that there should be no difficulty whatever in the matter; all that is necessary is for all operators to buy his company's irons exclusively. I am happy to say that the officials of his company take a very different attitude, and are quite active and broadminded in the rig iron movement.

Lack of Co-operation Between Suppliers and Operators

There has been a noticeable lack of co-ordination between the manufacturers and the operators, the fault lying fully as much with one as the other. The need

Don't think of all the things money would buy—if you had it.

MORE PROOF PAGE MENT

C

Men's business here is to know for the sake of living, [illegible] Harrison

As John Bull Views It

SIR John Cadman of England addressed the members of the American Petroleum Institute at their late meeting, having been invited upon former occasions to address oil men of the United States, but heretofore finding it impossible to arrange a trip to this country at a season when one of our conventions would be under way. Sir John said, in part, as follows:

"I have been able to visualize the tremendous part which the United States plays in the economic mechanisms of the world.

"It is not so many years since Kerr, the apothecary, was selling petroleum as a cure for all ailments—it is not so long since (62 years) Drake pierced Pennsylvania soil, and gave birth to the great petroleum industry. It is not so long since but a small fraction of the crude product was utilized, the greater portion being sacrificed as unsalable and useless. It is not so long since the civilized world literally lived in darkness, and knew nothing of the kerosene oil lamp and the present rapid means of motor transport. And, it is well within the memory of most of us when oil companies were obliged to exercise all their ingenuity, not merely to find an outlet, but to foster and promote new uses which would enable them to dispose of their production.

"No industry in the history of mankind has shown such phenomenal growth, and no industry contributes more to modern civilization than the petroleum industry. The search for minerals dates back to time immemorial, and is as old as history itself; but we find ourselves coworkers in a new branch of engineering science of paramount importance, and upon our shoulders rests a grave responsibility. Petroleum is today awakening and sustaining enormous public interest and rightly so. This unprecedented growth is mainly due to the untiring and unremitting efforts, indomitable perseverance and enterprise exhibited by the pioneers of your great country.

"It is not unnatural that such a mobile and efficient form of energy should replace the more cumbersome solid, coal; but I am not one of those who imagine that in the long run there will be a real rivalry between these two commodities. Each has its sphere of usefulness and the world certainly requires every economical form of energy, be it either liquid or solid.

"I believe the day is not far distant when the chemist will be able on a commercial scale to add a hydrogen atom to a coal molecule and so convert that solid black form of energy into the more convenient mobile fluid. I firmly believe that the success which has been achieved in the past is due to its comparative freedom from control and restrictions by governments, and the striking example of the success achieved by the United States may in some measure be attributed to the unfettered way in which the enterprise has been developed.

"We in Europe who were within such close proximity to the scenes and horrors of war, and were stimulated by agencies more vivid than could possibly reach all of you, recognized what stupendous efforts were being made in the United States to provide ample supplies of this vital commodity. We recall with pride how voluntarily and cheerfully you subscribed to the gasolineless Sunday. The names of such Americans as Bedford, Requa and O'Donnell will be handed down and associated with those who played such important parts during that stirring period.

"Now that the war is over, it is not unnatural that Government organizations created to control industry should cling, or attempt to cling, to these industries, and herein lies a danger. An unmistakable sign of the times is the state exploitation of petroleum lands or to join in partnership with others for that purpose.

"Government control and Government operation is much the same all the world over. I do not know how far your industries were or are controlled, or are under the influence of your Government, but I do know that in England all the industries which were controlled during the war and for some time after the armistice, are having a very hard time to bring themselves back to industrial and competitive efficiency. It is not necessary for me to enumerate the many instances where such industries have inherited a Government legacy in the form of a whole series of regulatory orders, restraints, and impossible conditions. Without the stimulus of war, Government control is characterized by wasteful and ill-advised expenditure which is inherent in the system itself. When Government takes over large commercial undertakings, its influence is soon reflected in increasing costs to the public which it serves, or by increased costs of operations which really amounts to the same thing.

"I had the privilege a short time ago to deliver a presidential address to the British Institution of Mining Engineers and I then pointed out that what the coal mining industry in the United Kingdom suffered from most was over-legislation, and if that industry was to survive, a respite from the well-meant but bungling attention of Parliament was essential.

"I think that the lesson which the petroleum industry has learned out of its war experience is to take upon itself a full realization of its responsibility to the public if it is to enjoy freedom from Government control or interference. The solution, it seems to me, lies within the industry itself, by getting together to promote its welfare by common consent of its members and to cooperate in every way possible.

"Another phase of the world's petroleum problem is exhibited in the growing anxiety in certain countries to impose heavy taxation upon crude petroleum and its products. If the industry is to have a normal and healthy expansion this form of toll is not only detrimental

No man will find the best way to do a thing unless he loves to do that thing.—Japanese Proverb.

DEPENDABLE HEAT CONTROL

In this connection it might not be out of place to suggest that gladly the movie-manager should exploit the modern gas-range upon his screen, along with other gas domestic-time-savers, especially "featuring" the oven-heat regulating device which has today become a worthy feature in one form or another, although there is but one "Lorain," to his advantage pointing out the fact that where heat is thus automatically "regulated" in the oven, the housewife who adopts the method will save sufficient gas to pay her movie ticket, and accomplish available time that she may spare to the enjoying of screened-stories.

If we have counted correctly, there are now about seventeen types of gas-ranges manufactured with oven-heat controls, and we doubt not that this number will become augmented rapidly, in view of the fact that the idea has proven a practical one, not being *new, as of the last number of years,* but as having been thoroughly tested-out, and perfected first in the form of this product from Lorain.

As a new saying versus the one of the past, let us say, "*Give the inventor his due.*" It is, therefore, that we are mentioning the name of the original oven heat control, though, as we have said, there are now approximately seventeen types or adaptations of the idea, each possessing merit, the particular phases of each of which we leave to be told-of by their makers. Our editorial mission is to "boost" for the principle and the method that is fast becoming universal, such being the case, as a consequence of the principle being well-worth-while.

All heat-controls, as there are patents, and patents pending, and because various theories regarding adaptation exist, cannot be in every respect alike; therefore, it becomes the province of each manufacturer to tell *his* story regarding *his* particular type, and as a little piece of friendly editorial advice, let us say——— GO TO IT, FRIEND MANUFACTURER!

FLEXIBLE GAS TUBING

AS one line of efficient service to its members, along with many other pieces of fine work in behalf of the manufactured gas industry, the American Gas Association has created a set of rules regarding gas-tubing

General: (a) Tubing for the purpose of this specification shall be made in suitable lengths with end pieces securely attached.

(b) Length of tubing for the purpose of this specification is defined as "Tubing with end pieces attached," and to be 6 feet in length.

(c) Leakage for the purpose of this specification is defined as not exceeding 0.02 cu. ft. per hr. per 6 foot length.

(d) Rubber slip ends when used with flexible tubing must have internal corrugation to conform with corrugations of the standard hose nozzle.

(e) When a metal helix is used in the construction of tubing, it shall be of one continuous length, without splices or other joints and be of itself gas tight.

(f) Each length of tubing shall be labelled with a tag attached to the tubing or a marking on the end pieces or both. The inscription shall state the manufacturer's name, the length of the tubing and the capacity or rate of gas flow in cubic feet per hour under the condition of a pressure drop of one inch of water, as determined by Test No. 2.

(g) Bare metal tubing depending for its tightness on a thread-like rubber or similar packing is not permissible.

Strength: (a) The length of tubing shall be so resistant to crushing that it will support a transverse load of 75 pounds per lineal inch without either permitting a leakage of gas or a restriction of the gas flow as determined by Test No. 3.

(b) The length of tubing shall be able to withstand without leakage, for five minutes, a steady lengthwise pull of 50 pounds as determined by Test No. 4.

(c) The length of tubing shall be able to withstand without leakage or becoming detached, the shock resulting when a 5 pound weight fastened at one end to the length of tubing, falls through a height of 30 inches while the other end is supported by the rubber slip end attached to a standard hose nozzle held in a vertical position as determined by Test No. 5.

(d) The length of tubing when extended its full length shall be capable of withstanding without leakage, a twisting movement acting clockwise and counter-clockwise, sufficient to produce an angular deflection of 180 degrees per foot of length. The tubing must also return to its original position at the conclusion of the test, as determined by Test No. 6.

Flexibility: (a) The tubing shall be sufficiently flexible that it will make continuous contact with a cylindrical form three inches in diameter for 180 degrees of its circumference when a weight is suspended from each end of the tubing. The weight for tubing not greater than 1/4 inch internal diameter shall be 2 pounds and for tubing from 5/16 inch to 5/8 inch inclusive, shall be 4 pounds, as determined by Test No. 7.

Resistance to Freezing: The tubing after a period of 30 minutes shall show no leakage when wrapped snugly 1 1/2 times around a cylindrical form 3 inches in diameter before and immediately after being kept at a freezing temperature for six hours, as determined by Test No. 8.

Resistance to Heat: The length of tubing shall be so resistant to heat that it will not soften sufficiently to become sticky, or for any material to ooze through the outside covering or inside the tubing when the length of tubing is kept for six hours at a temperature of 125 degrees Fahrenheit; first in dry air, second in saturated air. At the conclusion of each test the tubing shall not leak when subjected to wrapping test as described in Test No. 8.

Elasticity of Rubber Slip Ends: The rubber slip ends when forced over a form 20 per cent larger than the internal diameter of the rubber end and permitted to so remain for two weeks, shall, upon removal, show an enlargement of not more than ten per cent of its normal diameter as determined by Test No. 10.

Gripping Power of Rubber Ends: The rubber ends when attached to a standard hose nozzle so that 3 or more corrugations are engaged must withstand a longitudinal pull of 20 pounds as determined by Test No. 11.

Better far to die in the old harness than to try to put on another.—Titcomb.

AROUND THE BELT

New Wells, New Pipe Lines, New Contracts, Addresses and Extensions. A Fund of Valuable News Gathered for the Journal Through Many Sources

TRADE PERSONALS

Preston, Julian [illegible] for the Empire Gas & Fuel Company, Bartlesville, Okla., is now on the staff of the Texas Company at [illegible] and will make his headquarters at Ardmore, Okla.

Cantley, A. [illegible] has resigned from his post as Superintendent of the Randall Gas Company, Randall, West Va.

Davis, William N., of Bartlesville, Okla., at the annual meeting of the Mid-Continent Oil & Gas Association was re-elected General President of the organization.

Dickson, M. L. [illegible] has been elected Vice-President of the Stone Gas Company, organized at Bridgeport, West Va., for the purpose of [illegible] and staking drilling operations [illegible] located near that city.

Ferguson, L. J., of the Legal Department of the Empire Companies, Bartlesville, Okla., has resigned from that post and is now located at San Jose, Cal., where he is engaged in another line of business.

[illegible] L. K. is Manager of the Gas & Electric Shop of the Philadelphia Company at Sewickley, Pa.

[illegible] W. F., who was formerly with the Lone Star Gas Company of Dallas, Tex., as General Manager, is now with the Pure Oil and Humphreys interests and is in charge of the [illegible] of a gas line extending from Mexia to a point on the Gulf Coast.

Henderson, Clyde C., has taken up his duties as New Business Manager of the Wheeling Gas & Power Company, Wheeling, Ohio.

Keyes, H. A., has been appointed Vice-President and General Manager of the Gas & Electric Shop of the Philadelphia Company, Pittsburgh, Pa.

Lawson, C. A., is President of the [illegible] recently organized [illegible] W. Va.

[illegible] H. W. [illegible] Philadelphia Company [illegible] Gas & Electric Shop at McKeesport, Pa.

McDonald, H. S., is Manager of the [illegible] Philadelphia Company [illegible] Gas & Electric Shop, Pittsburgh, Pa.

[illegible] P. H. [illegible] Manager of the [illegible] and Electric [illegible] Pittsburgh, Pa.

[illegible] Moses, H. [illegible] was re-elected President of the Mid-Continent Oil & Gas Association at the recent annual meeting of that organization.

Stone, James L., has been appointed General Manager and Treasurer of the Wheeling Gas & Power Company, Wheeling, Ohio.

Tranor, J. K., of Sacramento, Cal., is President of the Arbuckle Oil & Gas Company, which will undertake drilling operations [illegible] Cal.

Weblinger, A. [illegible] in charge of the North Side Gas & Electric Shop of the Philadelphia Company, Pittsburgh, Pa.

DECEASED

Dennis, Howard A., President of the West Virginia General Gas Company and the West Virginia & Maryland Gas Company and Vice-President of the Eastern Oil Company, died at his home in Buffalo, N. Y.

Trace, Frederick D., [illegible] for a number of years with the Eastern Oil Company, died recently in Buffalo, N. Y.

ITEMS OF FINANCE

KANSAS [illegible] $400 [illegible] Oil & Gas Company [illegible]

[illegible] Harry [illegible] $250,000 [illegible] $250,000.

NEW FRANCHISES

[illegible]

A true philosopher is beyond the reach of fortune.—Landor

Chickasha—The Chickasha Gas & Electric Company holds a franchise under which it will distribute natural gas in this city. Arrangements are now being completed for the constructing of a pipe line connecting the city with the supply lines of the Oklahoma Natural Gas Company, a distance of four miles. The work is under the supervision of F. D. Shaffer, Manager of the Chickasha Company.

WYOMING—*Powell*—John McFayden of Casper, Wyo., who is General Manager of the Ohio Oil Company, has been granted a franchise under which natural gas service will be installed in this city.

INCORPORATED

TENNESSEE—*Nashville*—The Capital Phosphate Oil & Gas Company has been incorporated with a capital of $250,000. Those named as incorporators are: Walter O. French, J. R. Allen, Winfred French, J. E. Hill and G. W. Terry.

WEST VIRGINIA—*Bridgeport*—The Northwestern Gas & Oil Company has been formed here with a capitalization of $25,000. Those named as incorporators are: J. Ben Stout, A. J. Williams, C. E. Williams, T. J. Hefner, B. H. Martin, J. J. Johnson, C. S. Bartlett, Bridgeport, W. Va.

The Stout Gas Company, capitalized at $15,000, has been organized by local business men for the purpose of drilling for oil and gas on a lease near this city. Officers of the new concern are: C. A. Lawson, President; M. L. Dunkin, Vice-President; Arden Teter, Secretary and Treasurer, and Frantz Dillon and William Gray, Directors.

Charleston—Authority has been secured by the Newlon Oil & Gas Company of this city to surrender its charter.

Clarksburg—The Sir Oil & Gas Corporation has been formed in this city with a capital of $25,000. The incorporators named are: R. R. Roberts, N. C. Steele, W. Lee Williams, George E. Lockwood, Clarksburg, and Charles F. Ingraham, St. Marys, W. Va.

Mannington—The J. B. Thomas Oil & Gas Company has been incorporated with a capital of $25,000. Among those interested in the venture are: J. B. Thomas, Carney B. Thomas, M. B. Efaw, W. R. Thomas, Mannington; L. L. Thomas, E. A. Park, Blacksville; A. H. Toothman, Fairmont.

Parkersburg—A charter has been granted the Concrete Oil & Gas Company of this city. The company is capitalized at $150,000. Among those interested in the formation of the new concern are: E. H. Lockhart of Elizabeth; P. D. Sheppard, W. K. Sheppard, R. E. Davis and A. W. Windom of Parkersburg.

PER CUBIC FOOT—RATES

ARKANSAS—*Fort Smith*—The La Salle Oil & Gas Company has been granted permission by the State Railroad Commission to charge 10 cents per thousand for gas delivered to the city. The company in its petition asked for a 15-cent rate, while the city contended for a 7-cent rate. The rate of 10 cents recommended by the Commission is a compromise between the two.

KENTUCKY—*Louisville*—The Louisville Gas & Electric Company has been granted permission to supply its customers with mixed artificial and natural gas. The price for the first 5,000 cubic feet will remain the same as heretofore; the rate for the next 5,000 cubic feet will be 5 cents over the natural gas rate; for the next 10,000 cubic feet, 10 cents over the natural gas rate, and over 20,000 cubic feet the increase over the natural gas rate will be 25 cents per thousand.

The gas will be mixed only during the winter months when shortage of natural gas would reduce the efficiency of the company's service. The increased rates will be effective only during the period of mixed gas service.

OHIO—*Cincinnati*—The new ordinance affecting local gas rates gives the Columbus Gas & Electric Company permission to charge a flat rate of 50 cents per thousand during the months of April to October, inclusive, while during the winter months a sliding scale ranging from 50 cents to 65 cents per thousand has been granted. A minimum monthly charge of 75 cents has also been allowed. The rate formerly charged by the company was 35 cents per thousand.

Toledo—The Northwestern Natural Gas Company has increased its rates in this city, Bowling Green, North Baltimore, Maumee and Perrysburg. The new schedule ranges from 37 cents per thousand for the first 5,000 cubic feet used to 67 cents per thousand for gas consumed over 15,000 cubic feet. The former schedule ranged from 37 to 52 cents per thousand.

OKLAHOMA—*Holdenville*—Local gas rates have been temporarily increased by order of the State Corporation Commission. The increase affects only gas used for industrial purposes. The new rate for this service is 15 cents per thousand.

Okmulgee—The Okmulgee Gas Company has been given permission to increase its rates temporarily 10 cents per thousand. The federal court also granted a temporary order restraining the state corporation commission from putting into effect the rate schedule drawn up by it for this city.

Wagoner—The Commonwealth Public Service Company has been denied permission to increase its rate from 48 cents to 65 cents per thousand.

PENNSYLVANIA—*Bradford*—The Bradford Gas Company has made effective a rate of 50 cents per thou-

GENERAL

To be out of place is not necessarily [illegible] Johnson.

Enid—The Enid division of the Oklahoma Gas & Electric Company has organized a club called the "Enid Division Thrift Club." All the employees are members and the object is to save a certain amount each week, if it is nothing more than 50 cents. O. G. & E. stock is bought every month and constitutes the assets. The club will close its books at the end of each year, and the members will be paid in stock or cash, whichever they prefer.

Garvin County—No. 2 well of Jones & Nelson on the Newberry lease, section 14-1n-3w. is reported to be good for 6,000,000 cubic feet from a depth of 1,335 feet.

Keller and associates have completed a 5,000,000-cubic foot gasser in their No. 1 on the Derdyne tract, section 17-1n-13w, the sand being reached at 1428 feet.

Lawton—The Lone Star Gas Company recently completed its pipe line to this city, and local residents are now enjoying gas service again, after having been deprived of this convenience when the local supply failed and the supplying company went into the hands of a receiver. City Attorney S. I. McElhoes traveled by airplane to Dallas, Texas, to sign the contract with the Lone Star Company.

Nowata County—Shepherd and others in No. 3 on the Cobbs property, section 6-25-15 report a good gasser.

Oklahoma City—The Corporation Commission has ruled that beginning with the first of the year, companies in Oklahoma will be required to measure all gas in the various stages of its journey from the well to the ultimate consumer.

The purpose of the order is to enable the commission to obtain accurate figures upon loss of gas in course of its transmission from the producing wells to consumers meters.

The gas companies have expressed their entire willingness to cooperate with the commission, in installing meters at all points necessary to secure accurate figures upon loss of gas.

This loss, according to testimony presented to the corporation commission, ranges all the way from 10% to 70% of the entire amount of gas purchased for transmission to consumers.

The order requires measurement of gas through meters when it enters the transmission line, and when it leaves the transmission line and enters the local distribution system, and also as it leaves the distribution system and is delivered to the ultimate consumer.

The order also requires measurement of all gas for light, heat and power, in connection with its transmission and distribtuion.

Okmulgee County—Smith and associates have completed their No. 2 on the Townlot lease, section 18-13-14, and report a production of around 20,000,000 cubic feet at 2562-72 feet.

Oklahoma County—The Oklahoma Natural Gas Company has been granted permission to construct a pipe line which will carry gas across the western portion of section 36-12n-4w.

Pauls Valley—According to report John Ringling of New York and Frank Ketch of Ardmore, Okla., have interested themselves in a project which contemplates the laying of an eight-inch pipe line from the gas fields in Garvin County to this city, and to distribute natural gas in this city.

Pawnee County—The Creek Oil Company has completed a good gasser in its No. 1 on the Ellis lease, section 27-20-6. The sand was reached at 2766-78 feet.

OREGON—*Astoria*—The Lower Oil & Gas Company has showings of oil and gas in a test near this city, at a depth of 2868 feet.

PENNSYLVANIA—*Allegheny County*—In the Duff City field, Kaltenbauch Brothers have a gasser in the salt sand at a test on the J. B. Means farm.

Clarion County—The Neely-Clover Company has completed a 12,000,000 cubic foot gasser in the Pine Hollow district. The company has leases on approximately 2,000 acres in this section, and has completed six producing wells.

Greene County—On Ruffs Creek, Washington Township, the Philadelphia Oil Company's test on the T. J. Huffman farm is a fair gasser in the fifth sand. In Aleppo Township, the Cameron Oil & Gas Company's test on the William Loar farm is a good gasser.

A wise man will make more opportunities than he finds.—Bacon.

NATURAL

GAS INDUSTRY

GASOLINE-PRODUCTION

FEBRUARY 1922

PUBLISHED BY THE PETROLEUM PUBLISHING COMPANY

MEMBERS OF ASSOCIATION OF NATURAL GAS SUPPLY MEN

ASSOCIATION OFFICES

905 Oliver Building, Pittsburgh, Pa.

DIRECTORS

FRED A. MILLER	F. R. HUTCHINSON
T. C. CLIFFORD	A. W THOMPSON
L. A. ADAMS	WM. PATTERSON
O. F. FELIX	R. A. McKINNEY
W. B. GLOVER	F. W. MINER
WM. B. WAY	B. T. BECHTEL
E. S. ROONEY	GEO. D. ROPER

Acme Fishing Tool Company, Parkersburg, West Va.
Ajax Iron Works, Corry, Pa.
American Atmos Corporation, Pittsburgh.
American Cast Iron Pipe Co., Chicago.
American Foundry Construction Co., Pittsburgh, Pa.
American Heater Corp., St. Louis.
Anchor Packing Co., Pittsburgh.

Bailey Meter Co., Cleveland.
Baltimore Gas Appliance & Mfg. Co., Baltimore.
Bartlesville Supply Co., Bartlesville, Okla.
Bessemer Gas Engine Co., Grove, City, Pa.
Black Steel & Wire Co., Pittsburgh, Pa.
Borden Company, Warren, Ohio.
Bovaird & Seyfang Mfg. Co., Bradford, Pa.
Bradford Motor Works, Bradford, Pa.
Bristol Co., Waterbury, Conn.
Broderick & Bascom Rope Co., St. Louis.
Bryant Heater & Mfg. Co., Cleveland.
Builders Iron Fdy., Providence.
Byers, A. M. Co., Pittsburgh.

Chaplin-Fulton Mfg. Co., Pittsburgh.
Chapman Valve Mfg. Co., Tulsa, Okla.
Clark Bros. Co., Olean, N. Y.
Cleveland Gas Meter Co., Cleveland.
Colona Mfg. Co., Pittsburgh.
Colonial Supply Co., Pittsburgh.
Columbia Gas Stove Co., Huntington, W.Va.
Columbian Rope Co., Auburn, N. Y.
Columbus Heating & Ventilating Co., Columbus, Ohio.
Continental Supply Co., St. Louis.
Cooper, C. & G. Co., Mt. Vernon, O.
Wm. M. Crane Co., New York.
Cutler Hammer Mfg. Co, The, Milwaukee

Dayton Pipe Coupling Co., Dayton.
Davison, N. C., Gas Burner & Weld'g Co., Pittsburgh.
Doherty & Co., Henry L., New York.
Dresser, S. R., Mfg. Co., Bradford, Pa.
Duquesne Burner Service Co., Pittsburgh.

Eclipse Gas Stove Co., Rockford, Ill.
Economy Stove Co., Cleveland, O.
Economy Burner & Engineering Co., Pittsburgh
Equitable Meter Co., Pittsburgh.
Erie, Stove & Mfg. Co., Erie, Pa.
Estate Stove Co., Hamilton, O.

Fenwick-Reddaway Mfg. Co., Newark, N. J.
Fitler, Edwin H. Co., Philadelphia, Pa.
Foxboro Co., The, Foxboro, Mass.
Franklin Co., The, Massillon, Ohio.

Frick & Lindsay Co., Pittsburgh.

Garlock Packing Co., Palmyra, N. Y.
Gas Age, The, New York City.
Gas Appliance Co., Cleveland.
Gas Engineering & Const. Co., Pittsburgh.
Gas Record, Chicago.
General Gas Light Co., Kalamazoo.
Germer Stove Co., Erie.
Gilfillan Machine Works, Ebenezer, N. Y.
Goodrich, B. F. Co., Akron, O.
J. H. Grayson Mfg. Co., Athens, Ohio.
Grinnell Co., Providence, R. I.

Butler, Pa.
), Pittsburgh.
Wellsville,
, Mich.

Imperial Belting Co., Chicago, Ill.
Ingersoll-Rand Co., Pittsburgh.
International Hale Gas Mixer Company, Chicago, Ill.
International Tank & Mfg. Co., Parkersburg, West Va.

Jarecki Mfg. Co., Erie.
Jones & Laughlin Steel Co., Pittsburg, Pa.

Kieselman & Co., Parkersburg, West Va.
Koppers Co., Pittsburgh, Pa.

LaBelle Iron Works, Steubenville, O.
Larco Wrench & Mfg. Co., Chicago.
Lattimer-Stevens Co., Columbus, O.
Leschen, A. & Sons Rope Co., St. Louis.
Lucey Mfg. Corp., Pittsburgh.
Ludlow Valve Mfg. Co., Pittsburgh.
Lunkenheimer Company, Cincinnati, Ohio.

MacWhyte Co., Pittsburgh.
Manhattan Rubber Mfg. Co., Passaic, N. J
Manley & Barlow Co., Corry, Pa.
Maxon Premix Burner Co., Muncie, Ind.
McKain, J. B., Fishing Tool Co., Parkersburg, W Va
Metric Metal Works, Erie.
Minneapolis Heat Reg. Co., Minneapolis.
Moon Mfg. Co., The, Chicago.
Moore, Lee C. & Co., Inc., Pittsburgh.
Moser Mfg. Co., Kane, Pa.
Mueller H. Mfg. Co., Decatur, Ill.

National Supply Co., Pittsburgh.
National Transit Pump & Mach. Co., Oil City, Pa.
National Tube Co., Pittsburgh.
Natural Gas Industry, Buffalo.
New Bedford Cordage Co., New York City.
New York Belt'g & Pack'g Co., New York.
Northrup Equipment Co., Parkersburg, West Va.

Ohio State Stove Co., Columbus, O.
Oil & Gas Journal, Tulsa, Okla.
Oil City Boiler Wks., Oil City, Pa.
Oil Trade Journal, New York.

Oil Well Supply Co., Pittsburgh.
Oxweld Acetylene Co., Chicago.

Parkersburg Mach. Co., Parkersburg, W.Va.
Parkersburg Rig & Reel Co., Parkersburg, W. Va.
Peerless Heater Co., Pittsburgh.
Pennsylvania Furnace & Stove Co., Warren, Pa.
Petroleum Publishing Co., Tulsa, Okla.
Petroleum Supply Co., Steubenville, O.
Pittsburgh Meter Co., East Pittsburgh.
Pittsburgh Reinforced Brazing & Mach. Co., Pittsburgh.
Pittsburgh Supply Co., Pittsburgh.
Pittsburgh Valve & Fittings Co., Pittsburgh.
Pittsburgh Valve, F'd'y & Const. Co., Pittsburgh.
Pittsburgh Water Heater Co., Pittsburgh, Pa.
Plymouth Cordage Co., N. Plymouth, Mass.
Pratt & Cady Co., Inc., Hartford, Conn.
Precision Instrument Co., Newark, N. J.
Prichard Supply Co., Mannington, W. Va.

Rathbun-Jones Eng. Co., Toledo.
Reading Iron Works, Reading, Pa.
Reid, Jos., Gas Engine Co., Oil City, Pa.
Rensselaer Valve Co., Pittsburgh, Pa.
Reliable Stove Co., Cleveland.
Republic Iron & Steel Co., Youngstown, O.
Republic Rubber Co., Youngstown, Ohio.
Republic Supply Co., Houston, Tex.
Reznor Mfg. Co., Mercer, Pa.
Riesenman Mfg. Co., Ltd., Franklin, Pa.
Robinson Packer Co., Tulsa, Okla.
Roebling, John A. Sons Co., Trenton, N. J.
Geo. D. Roper Corp., Rockford, Ill.
Rossendale-Reddaway Belt'g & Hose Co., Newark, N. J.
Ruud Mfg. Co., Pittsburgh.

Safety Gas Stove Lock Co., Nashville, Tenn.
Sanda
Sanitary
Sch
Selas C
South C
Spang,
Sprague
Stacey
Steele &
Stitt Ig
Stokes
Strause
Superior
Symmon

Taylor, W. P. Co., Buffalo.
Toledo Pipe Thr'd'g Mach. Co., Toledo, O.

Union Rubber & Asbestos Co., Trenton, N. J.
United Seal Co., Columbus.
Upson-Walton Co., Cleveland, O.
U. S. Rubber Co., New York.

Walker & Pratt Mfg. Co., Boston, Mass.
Welsbach Co., Gloucester City, N. J.
Westcott Valve Co., Seneca Falls, N. Y.
Western Gas Construction Co., Fort Wayne, Ind.
Westinghouse Electric & Mfg. Co, Lester, Pa.
Wheeling Steel & Iron Co., Wheeling.
Williamsport Wire Rope Co., Williamsport, Pa.
Worthington Pump & Mach. Corp., Buffalo.

York Derrick Co., Washington, Pa.
Youngstown Sheet & Tube Co., Youngstown, O.

FROM THE EDITORIAL MAIL BAG

FINANCIAL CONDITIONS

Informal Statements by Herbert P. Howell, Vice-President of the National Bank of Commerce in New York

THE present business situation is distinctly a two-sided proposition. There is much in it to be encouraged about. There is also much to be regarded seriously. Either an optimist or a [illegible] can cite plenty of facts to support his case [illegible] are partly right. But I have no hesitation in [illegible] the conviction that the favorable factors out[illegible] favorable factors. We are not going to have a [illegible] great and rapid revival of business such as the [illegible] might feel justified in hoping for. But we [illegible] a continued gradual trend [illegible] toward more stable and more active [illegible].

[illegible] far better shape at the end of 1921 [illegible] beginning. [illegible] be in better shape at the [illegible] 1922 [illegible] provided business men as [illegible] continue to act sensibly, and economy [illegible] and efficiency rule in business rather than [illegible] stimulation and expansion.

[illegible] conditions will prevail in business because [illegible] circumstance compels observance of [illegible]. Business that tries to run ahead of the [illegible] progress of the times toward normal will be [illegible]. [illegible] spread out will bring dis[illegible] failure. As a rule 1922 will be a good [illegible] time [illegible] business and [illegible] speculation.

[illegible] be made and success can be established [illegible] 1922. But the [illegible] within the bounds of [illegible]. [illegible] turnover [illegible] price [illegible] must be accepted. [illegible] profit margins [illegible] must be effected [illegible] production. There must [illegible]

[illegible]

although many prices will recede, but we hardly fear a general price demoralization.

The attitude of the public in respect to buying is now a more calculable business factor. It can be set down that the public has become thrifty and discriminating in buying. Decreased purchasing power and unemployment have made it so. People are willing to buy what they require so far as they are able and where they can get fair prices. A thrifty public in the long run is better for business than is an extravagant public.

There are impediments to the healthy functioning of the markets and difficulties in the way of a complete readjustment of the costs of production and distribution. These obstacles must be overcome before anything like a fundamentally normal business situation can be re-established.

Among the obstacles are mining, transportation and building labor wages. They must be further readjusted. There can be no thoroughgoing completion of general readjustment until these sources of high production and distribution costs have been dealt with; also the burden of taxation. The country's obligations must be met by taxes but there must be a reducing of current government expenditures and there should be a shifting of the burden of necessary taxation so as to reduce as much as possible its hampering effects upon productive enterprises.

[illegible] never before in modern industrial [illegible] been such a pressing need for economy through reduction of waste and increase in efficiency.

High general [illegible] must be reduced. It seems [illegible] that some further losses must be taken [illegible] alternative.

[illegible] equipped [illegible] go ahead with [illegible] great.

[illegible]

He is good that does good to others. La Bruyere

benefit the public and benefit the merchant by stimulating his sales.

These instances of wage and price readjustments are cited to emphasize the community of interest that all elements have in the consummation of readjustment.

No class in the community can expect to enjoy the benefits of deflation without sharing the burdens. Deflation, if it means anything, means a reduction of incomes as well as expenditures. It means a reduction of consumers' as well as producers' prices. It means a reduction of wage and salaries as well as profits and dividends.

There can be no equilibrium if any element in the community by resisting readjustment demands higher wages or higher purchasing power for the fruits of its efforts than are justified by economic relationship with other phases of industry, commerce and finance.

The year that lies ahead, I am confident, will see a progressive smoothing out of the inequitable conditions now prevalent in business.

Never before was there a greater demand for individual initiative in business, never before a greater need for penetrating judgment. To say that the times require to an unusually high degree the practice of conservatism, economy and efficiency is only to say that they require the intensive application of the methods by which, in the long run, the lasting and substantial progress of the world has been built. The full fruits of brilliant pioneering enterprise, in whatever field of endeavor, would never have been harvested had not discovery been followed by hard work.

The year 1922 may not be one of great realizations and fulfillments, but it will be one of laying the strong foundations for better business years to come.

STATE TAX——MOTIVE POWER GASOLINE

IN his biennial message to the legislature of the State of Mississippi, Governor Lee M. Russell urges the careful study of the new motive power, gasoline and kerosene. He points out their increasing usefulness and need, and suggests that the State's annual outlay for them will run into millions of dollars; that their grade is now known to be so poor that one-third or more of the motive power is entirely lost; and further suggests the regular inspection of these two products, it being probable that their analysis could be done without charge at two of the state institutions in their chemical laboratories by simply enacting laws empowering the heads of these institutions to call upon vendors of these products whenever they see fit for samples being sold for them. If necesary, the sheriff or some other county officer could procure these specimens, seal and ship them under regulations, and, therefore, no inspector would be necessary. If, however, the legislature thought an inspector important, the vendors of these articles could be required to pay a tax amply sufficient to support this outlay.

In another section of his message, the governor urges the enactment of a law for a tax of 2c per gallon on gasoline sold and used in the state for transportation purposes. This should provide a fund of about one million dollars annually. "The users of automobiles and trucks wear out more roads than anybody else, and they should pay in the main for the construction and upkeep of these highways."

****Connecticut now collects 1c a gallon on all gasoline sold for automobile use, at filling stations.—Editor.

Section 1 defines "gasoline" as (a) any volatile substance produced from petroleum, natural gas, oil shales or coals, heretofore sold under the name gasoline; (b) any volatile substance or product of not less than 46 deg. Tagliabue Baume test derived wholly or in part from petroleum, natura gas, oi shaes or coal; (c) any other volatile substance or produce of not less than 46 deg. Tagliabe Baume test sold or used for producing motive power in internal combustion engines or for producing power for propelling motor vehicles.

Section 8 provides: "That in the event that oil or gas is found in paying quantities, then the said board for oil development are hereby given full authority to make all necessary arrangements for saving, storing, conveying and marketing same in such manner and to such extent as their judgment may approve.

Governor McKelvie of Nebraska called a special session of the legislature to meet January 23rd. It is understood that among other subjects a tax on gasoline is up for consideration.

TO REGULATE TRANSMISSION LOSSES

CONFERENCES have recently taken place between the Bureau of Mines and the Natural Gas Association of America regarding transmission losses of natural gas in the Pennsylvania and West Virginia fields. Officials of various large gas companies operating in these states also attended the conferences. The plants of manufacturers of gas regulators and meters, in the Pittsburgh district, were visited in connection with the investigation.

OPPOSES OIL TARIFF

ONE of the strong opposers of oil tariff is J. B. Klumpp, of the United Gas Improvement Company, Philadelphia. He designates as an imposition, a permanent tariff on crude petroleum and fuel oil. Mr. Klumpp is a thinking man, a man of high ability and integrity. His opinons may well be harkened to. Mr. Klumpp was of the A. G. A. Gas Oil Committee, and has given an exceeding amount of time, thought, and attention to this subject. Recommendations from him should find a willing ear among our legislators.

The man who goes around wishing he had never been born is not the only one who regrets it.

REGARDING CONTROL

A RIGHT has come to us for an opinion as to what right has a gas company or a utilities commission to govern in what form of supply [illegible] or by what method gas shall be used after it has passed the meter, providing the gas is not used for illegitimate purposes. We desire to respond rightly [illegible] as nearly as possible according to what might be [illegible] the facts of the case, therefore we prefer before replying to discuss the situation and to ask in point the views of some of our leading gas men and commissioners.

In all commercial lines the purchaser of an article becomes its rightful owner and the general understand[illegible] he may do with his purchase as he sees fit.

One of the questions is, if a purchaser buys gas, and it is metered to him, and is thus vended at an agreed [illegible] what possible right has a commission or a gas company to state that the purchaser shall not use the gas purchased either in a lighting burner, or a range, or an incandescent or a stove, or a furnace, whether the furnace is built for gas, for coal, or for both gas and coal, or should it be equipped with a gas burner not built in.

Another question is, why should not every gas company or commission, rather seek to control by methods which would seem to be more within the scope and rights of either or both, by limiting the amount of gas to be sold a purchaser per month, or by charging as do some companies upon the upward sliding scale basis, which [illegible] a reasonable amount of gas has been used actually [illegible] the user through the charge amounting to [illegible] per thousand cubic feet for subsequent [illegible] that practically none could afford to consume more than such estimated amount of gas as would form the basis for the volume that a company could reasonably grant to any one customer, thus assuring gas to all [illegible].

The main point at issue with our inquirer is, has a gas company a right, or has a commission a right to say that gas shall not be used in [illegible] furnaces [illegible] certain specified [illegible]. There are these [illegible] the restricting [illegible] the use [illegible] the excessive use of gas. [illegible] apparent [illegible] possible illegal.

[illegible] warning all persons [illegible] Magazine, Buffalo, N. Y.

REGARDING MOTOR FUEL

DR. VAN H. MANNING, Director of Research American Petroleum Institute, is quoted as saying:

Despite the increase in gasoline production the entire output is being used, he pointed out, "and we are entering the winter with stocks no greater than normal." The speaker said, however, that there should be no concern over the future supply of motor fuel, stating that there are now four sources to look to: "Domestic wells, foreign resources, oil shales and substitutes."

There is no more striking picture of the pressure of automotive fuel requirements upon our oil resources than that of the per car availability of our crude oil production each year. For instance, in 1911 there were 315 barrels of crude oil for each car; 1912, 219 barrels; 1913, 198 barrels; 1914, 155 barrels; 1915, 115 barrels; 1916, 86 barrels; 1917, 67 barrels; 1918, 58 barrels; 1919, 50 barrels; and 1920, 48 barrels.

As indicated by this comparison, the increase in crude oil production was actually insufficient to meet automotive requirements.

Without the subsequent perfection of important refining processes, the development of the natural gasoline industry and the spreading of the quality range of commercial gasoline, the production of crude oil would have been all too insufficient.

SEVENTEENTH ANNUAL CONVENTION

THE Natural Gas Association of America and the Supply Men's Association asked responses to the following four questions:

First: In what manner could the exhibits be improved upon over previous years?

Second: In what way can the Natural Gas Association of America, the right-of-way program, better assist the Supply Men?

Third: How can the [illegible] entertainment be improved upon?

Fourth: What [illegible] to make on present [illegible] be adopted at evening [illegible]?

We [illegible] responded to the request for [illegible] the 25th [illegible] Association should [illegible] speed regulations.

VOLATILITY OF GASOLINE

D [illegible]

Men's evil manners live in brass, their virtues we write on water —Shakespeare

NATURAL GAS A PUSHER

Other Means than Natural Gas Must be Provided for the Expelling of Petroleum

LARGE quantities of oil, perhaps as much as 60 or 80 per cent. of the original reservoirs, are left underground in the United States when wells are abandoned, because no means have been determined whereby it is possible to recover more than a small percentage of the oil, according to A. W. Ambrose, chief petroleum technologist of the Bureau of Mines. This failure to effect a greater recovery of the underground oil is due to the exhaustion of the subterranean gas flow, says Mr. Ambrose.

The manner in which gas serves as an expulsive medium was recently shown by an experiment at the Petroleum Experiment station of the Bureau of Mines. A steel container about three feet long and three inches in diameter was filled with sand which was then thoroughly saturated with oil. The amount of oil introduced was known by weight and measurement. After the sand had been saturated, gas was forced into the container under a pressure of 200 pounds to the square inch. Then a valve at one end was opened and the gas allowed to escape, bringing with it perhaps 18 per cent. of the oil put into the container.

In other experiments, the amount of oil recovered varied from 15 to 25 per cent. depending on the pressure and other conditions. After the gas had forced out 18 per cent. of the oil, the container was held in a vertical position for the purpose of determining how much oil would drain out, but the capillary force exerted on the oil was so great that only a negligible quantity of oil drained from the sand.

"This simple experiment emphasized the fact that gas is the predominant factor in moving oil to the well and that when the gas is gone the production is gone," declared Mr. Ambrose. "In any event, it is unquestionable that large quantities of oil are left underground, and, whether the figure is 60 per cent. or 80 per cent., it is too large. In certain parts of the Appalachian fields, the practice of forcing compressed air or gas into a central well, from where it goes to adjoining wells and carries the oil with it, has caused wells to produce as much oil as they had up to the point when considered ready for abandonment.

"There are undoubtedly other means of effecting a greater recovery and these questions should be studied and applied before the wells are abandoned."

CO-OPERATIVE COMPETITION VERSUS COMBINATION

FOR a long period we have had in mind the question, "What is Combination?" Of course, one might observe the definition in our dictionaries, but when it comes to business matters where should the line be drawn between "Co-operative Competition" and "Combination."

No-man's-land lies between these two, but may easily be crossed by either, and when crossed, the forces of the two sides, intermingling, from a non-definable line. Judge Edwin B. Parker, General Counsel of the Texas Company, in discussing this very matter, said, "The ever-increasing complexity in the machinery of modern civilization renders co-operative effort a corollary to the attainment of the maximum of efficiency at the minimum of cost, and such co-operation between competitors along legitimate lines is not only entirely legal, but highly laudable, and in the public interest. He outlined the activities of governmental departments as related to the various industries, saying that through governmental and industrial co-operation duplication of effort and expense will be eliminated, economic waste will be discovered and prevented, new uses will be found for products and the consumer will be educated to such new uses.

After calling attention to the fact that war conditions rendered it not only desirable, but necessary for competitors to combine, with all that term implies, he said that such conditions no longer exist.

"I am convinced that, so far as the petroleum industry is concerned," he said, "the very real advantages flowing from the legalized combination under government control would be more than offset by the obvious disadvantages of such a program. . . . Of one thing, however, we may be certain: if government interference in the form of restrictive legislation to prevent monopolies and restraints of trade and to keep competition free is not effective, then government regulation and control of industry will follow. Let not the industry fool itself as to that. All knowledge of this fact should impel industry to observe the law as it is written, both in letter and in spirit."

"It is interesting to note," Judge Parker said, "The somewhat curious fact that the government, in seeking more effectually to strike down monopolies, used as a weapon the enforced restriction of the free power of merciless competition. The law has curbed competition in order to make it free. We are now coming to see that the ultimate solution lies not alone in keeping competition free, but also in adding to and developing the enlightenment of self interest."

BETTER HANDWRITING

LACK on the part of Public School educators to continue the practice of enforcing commercial writing in public schools up to the point of turning out good hand-writers, is responsible to a large extent for the poor handwriting on the part of so many who cannot lay the blame at the door of non-use of handwriting because of present-day dictating, which in many instances causes indifferent writing when one takes "pen in hand".

Among the criticisms passed by employes in various gas companies is that of poor handwriting on the part of other employes, great inconvenience being resultant largely through carelessness on the part of writers. In some companies the matter has gone so far as to have resulted in requests made by employes to the company to enforce legible writing.

Latent genius is but a presumption. Amiel.

Automobile Safety Lessons

Lesson Outline No. 12-A

SAFE AND EFFICIENT DRIVING—GENERAL

1 A man may have a mechanically perfect car, but because of careless driving he may cause an accident or results in serious injury or death to himself or others

2 Reckless driving is not a demonstration of skill

3 A moment or two saved today by reckless speeding is not economy, for speeding tomorrow may result in a wreck that will lay up the car for several days and you for several months Hurrying to get ahead of a train, a street car, or another vehicle saves only a moment or two at the ultimate destination and the gain is not worth the peril there is too much danger of accident

4 The best drivers are especially careful at dusk or twilight There is then neither enough daylight nor sufficient artificial light to make objects distinguishable at proper distances

5 Slow up for all turns in the road Blind corners are dangerous When it is impossible to see what is coming from around the corner, be prepared to stop Sound horn a short distance before the corner

6 Don't zig zag from one side of the street to the other

7 When installing chains on the rear wheels, install them on both wheels or none at all Only one chain may result in a serious accident Chains on all four wheels help the steering of the car

8 There are ruts at the bottom of almost every hill Striking these ruts at too high a speed may cause the driver to lose control of his car

9 Drive slowly at bridges and at culverts A bad rut or a stone in the road may throw your car against the railing

10 When attempting to pass another vehicle going the same direction, start turning out to the left at least 75 feet to the rear If you get up too close your view of the road ahead is obstructed and you may turn directly in front of another car coming toward you When you have passed a car don't cut back into the road too soon or slow down too soon

11 Always be careful when backing Sound horn twice or thrice signal other cars and look back not ahead to see where you are going Mirrors are valuable at all times

12 Clean windshields give you a clear view ahead Every car should have a secondary windshield cleaner or windshield wiper which will prevent snow or rain from obstructing the driver's view

13 When driving, do not attempt to carry on a conversation with others in the car Small children should preferably sit in the rear of the car, they should never be held in or between the arms of the driver Safe driving demands your full and undivided attention

14 Be sure and signal when driving toward or away from the curb

15 You should shut off the engine, remove the ignition key and set the emergency brake, when leaving the car Chock the wheels to prevent the car from moving accidentally

COOPERATING WITH POLICE

16 The traffic officer has a difficult job at the best and drivers should make every effort to assist him

17 At times the officer's directions may seem to be contradictory or unnecessary, but we should remember that he may have excellent reasons for his actions, reasons which we perhaps cannot understand at the time

18 He is responsible for all accidents which happen at his station Let us treat him as we expect him to treat us His good will is more desirable than his ill will

Complete sets of twelve copies of the "Safety Bulletins and Safety Lessons for Automobile Drivers" can be had at cost by addressing the National Safety Council [illegible] 168 N. Michigan Ave. Chicago.

WORLD PEACE

PREMIER Takashi Hara of Japan, who some time since was slain, sounded the keynote of all our efforts and instruments of peace in communities of peace in families as well as peace among nations when he said

What marked [illegible] the gaping [illegible] the great [illegible] a new evolution [illegible] permanent peace

[illegible] may it be a temporary expedient [illegible] organize in the [illegible] a [illegible] common to [illegible] peoples [illegible] a new goal of human [illegible] the [illegible] limited number of men [illegible] could be conserved up for the [illegible]

[illegible] which the mutual understanding of all [illegible] and [illegible] [illegible] can achieve

Don't be "consistent," but be simply true —Goldsmith.

VAST EXPENDITURE

AT the second annual meeting of the American Petroleum Institute, Mr. J. C. Donnell made the statement that:

"$948,000 will have to be expended in 1922 on productive oil acreage and well operations, if this country is to maintain its present oil production." Mr. Donnell is president of the Ohio Oil Co.

"The present daily gross production of the United States is approximately 1,300,000 barrels," the speaker said, "and by reason of raising this oil there is a drainage per year of 135,415 acres; so that there must be acquired and operated during the year 1922 a like amount of productive acreage to maintain present production, the cost of acquiring which, including royalty, drilling, lifting and wildcatting, will represent a total outlay of $948,000,000."

Mr. Donnell pointed out that his estimate of the acreage necessary to maintain sufficient production to supply requirements is based on his past experience in the important oil fields in which he has drilled and managed the operation of 42,000 wells.

There would seem to be excellent grounds to believe that exhaustion of supply in sections of the country may be easily offset by tremendous reserve, according to Mr. Harry F. Sinclair who is chairman of the Board of Directors of the Sinclair Consolidated Oil Corporation. Mr. Sinclair said:

"There is plenty of petroleum, and always will be. Exhaustion of the world's supply is a bugaboo. In my opinion, it has no place in practical discussions. The great question we are confronting is this: Is America willing to pay the price for an adequate share of the world's supply?

"When I say that America must 'pay the price', I refer not merely to market quotations for gasoline, lubricating oil and other petroleum products, and yet as these quotations are of fundamental importance, it may be well to treat them at once.

"Petroleum prices in 1921 on an average have been too low. In my opinion they will average much higher in 1922 than in 1921, and may average higher than ever before in the history of petroleum.

"Taking a longer view, I am confident that petroleum prices must gradually work higher. Naturally, there will be periods of depression but, in the long run, petroleum will command prices which more nearly reflect its service value."

However, Mr. Sinclair pointed out that while America is the chief consumer of petroleum products, the day is coming when the collective requirements of other countries will far exceed our own. America is still the chief producer of petroleum but he believes the day is coming when American fields will not be the largest producers and when American refiners who did not fortify themselves in foreign fields will be forced to take a minor place in the refining industry of the world.

"Unless America is willing *now* to 'pay the price' of preparedness, she will lose her position of petroleum supremacy, and the nationals of other countries will force her to 'pay through the nose'," he declared.

Mr. Sinclair said that in the last six years we had been drilling an average of about 26,000 new wells each year, of which about 7,000 were gassers or dry holes. Even disregarding the cost of dry holes, this means, he said, that we are spending more than $300,000,000 annually in new drilling in order to keep pace with the demand.

OUR OKLAHOMA FRIENDS

THOSE in our own natural gas industry out in Oklahoma have not only much to be proud of in the matter of natural-gas resources, but the following indicates the enormous wealth of the state with its raisings of crops transformed into dollars and cents on reasonable prices paid for the products. Oil stands high in Oklahoma, but in the scale of income, dollar for dollar, it can't touch the products of the farm.

The value of all crops produced in Oklahoma in 1921 was $176,677,000, according to estimated figures just released by the Oklahoma State Board of Agriculture. Preliminary estimates of acreages, production figures and values of the prnicipal crops show that cotton, in spite of the ravages of the boll weevil, still leads all others with a production of 530,000 bales valued at $43,725,000. Winter wheat is a closed second, with 3,786,000 acres planted, producing 47,325,000 bushels valued at $40,700,000; the corn crop, with a valuation of $24,616,000 is third. Figures on dairy and poultry products are not included in the estimates, but it is certain that if these figures were available, the total value of all farm products for 1921 would be greatly in excess of the values of the crude oil produced in the state during the same period, which has been estimated at 113,747,000 barrels, valued at $201,901,000.

GASOLINE TAX TO RAISE SOLDIER BONUS

CONGRESSMAN BACHARACH of Jersey has introduced a bill providing a soldiers' bonus plan, the revenue for which is proposed to be derived from "a tax of three cents per gallon on sales and deliveries by manufacturers or producers of gasoline; said tax to be payable and collected at the source of production." Mr. Bacharach expects that the proposed tax would yield from $240,000,000 to $250,000,000 annually. This estimate is based upon an estimated sale of about 8,000,000,000 gallons each year. Mr. Bacharach also expects that it would be necessary to apply the tax for a period of ten years to secure the revenue necessary under the bonus plan.

Idle curiosity causes a lot of people to work overtime.

What Is Gasoline?

A Discussion of the Quality of the Various Grades of Gasoline and Their Uses

IN a very interesting address by Dr. C. K. Francis, Chief Chemist of Cooden & Company, delivered before the Petroleum Institute, Dr. Francis said, after propounding the question, "What is gasoline?"

Two men were homeward bound from a late party when they got into an argument. One said:

"By George, there is the sun coming up." The other replied:

"That's not the sun, that's the moon."

After considerable discussion they made a wager and agreed to let the first person they would meet decide the question. After scuffling down the sidewalk for half a block they met another man who was also somewhat muddy on his feet, and one of them said:

"Look here, Bill and I have an argument. He says that's the moon up there, and I say it is the sun. We've a bet on it, and want you to settle it for us."

He with one arm around the lamp post, steadied himself and said:

"Well, my friends, it is unfortunate, but I am a stranger in this town and have not yet become familiar with the landmarks."

I know a gentleman who for some years had studied petroleum products, who presented a paper on gasoline before one of the scientific societies. He, quite learnedly, discussed gasoline, its various properties and uses. When the time came to discuss the paper one of the first questions asked him was: "What is gasoline?" To quote from a recent United States Bureau of Mines publication: "Although gasoline is one of the most important commodities of today, yet the public has meager information regarding it. They are not familiar with the landmarks."

After telling the foregoing story, Dr. Francis proceeded as follows:

"The additional point is that I doubt if even a Lord Mayor or a Pierce Arrow would be able to distinguish the gasoline products apart."

Therefore, while to certain technical men the full text of the Doctor's remarks would prove not only interesting but valuable, we will quote some portions of the Doctor's statements.

"Through chemical analysis we find that gasoline is composed of paraffins, isoparaffins, olefines, naphthenes, isoparaffins, aromatic compounds, and the normal product appears to be made up largely of the hexahydrogen from heptane to tridecane. But the consumer does not give a hang about these. What he wants to know is, has the gasoline the proper quantity of pep? This desirable property is more technically classified under volatility, which is determined by fractional distillation, and includes the determination of the initial boiling point and end point.

"Most of the gasoline today is bought and sold on the basis of its volatility, the more volatile gasolines having an end point around 400 are consumed by the aeroplane motors, the intermediate grades are consumed by automobiles, and the lowest grade by trucks and tractors. Mixtures of gasoline and naphtha, when properly blended, make a very satisfactory motor fuel. However, poor blending of natural gasoline may produce a product which may be very objectionable in that the initial boiling point would be too low and the quantity of the light material so high that the carburetor of a motor would be out of adjustment, especially as the heavy material would have to be passed through at the same adjustment. A small quantity of natural gas gasoline helps to lower the initial boiling point and therefore makes the starting of the motor easy. Of course the addition of large quantities of heavy ends to natural gas gasoline makes proper gasification of the fuel impossible and causes deposition of carbon in the cylinders and dilution of the lubricating oil when it leaks past the rings.

"Drivers of automobiles often wonder why results from gasoline purchased here and there are not alike. This might somewhat be answered by recounting the story that the Doctor related as follows:

"[illegible]

"[illegible]

"[illegible]

"Well, [illegible] and I [illegible] made [illegible] and [illegible] there was [illegible] the [illegible] a good

deal of it—that there are men in the business who don't know what they are doing.

"All gasolines should be free from acid, and products which may decompose and form acid.

"The total available energy of a gasoline is, of course, determined from the heat of combustion. This has been found to be very close to 20,000 B.T.U. Many gasolines examined have not shown a variation from 20,000 B. T. U.'s of more than 2 to 3 per cent. The heavier gasolines have a higher energy value per gallon than the lighter ones.

"The quantity of sulphur occurring in gasoline is important. The test for detecting sulphur is known as the 'doctor' test, in which use is made of a solution of litharge in caustic soda, with the addition of a pinch of sulphur. When a mixture of gasoline and this solution is shaken there should be no black precipitate formed, and the gasoline should not be discolored. If the gasoline does not react with the 'doctor' solution, it is classified as 'sweet', and if there is a reaction it is said to be 'sour'. Sour gasolines usually have an offensive odor, and frequently give off hydrogen sulphide, a corrosive gas, when heated to about 30 deg. F. Sometimes free sulphur finds its way into gasoline as a result of excessive quantities of powdered sulphur being added during the process of refining. This may be detected by what is known as the 'copper' test. A piece of copper placed in a small quantity of gasoline should not become tarnished or blackened when the gasoline is warmed. This is an important test, because sulphur readily combines with most metals, and has a strong affinity for copper, brass and similar alloys. A wider knowledge of this test should result in it being required for all gasolines.

"A good grade of gasoline seldom contains more than 0.01 per cent. total sulphur, but gasolines have been found on the market containing six times this quantity. The deleterious action of the free sulphur becomes apparent when it is present to the extent of 0.008 per cent., and very bad and corrosive in action when it is present to the extent of 0.018 per cent.

"At first little attention was given to the characteristics of gasoline, but, with the development of the market and favorable prices, methods were devised to classify this product. The original test was that of gravity, but it has been found that gasoline varies from 45 to 68 deg. Baume gravity, and that this wide variation is not necessarily due to any inferiority. It soon became known that the crude oil found in different parts of the country varied in many characteristics, and especially in the nature and quantity of the gasoline obtainable from these crudes. It is commonly known that a gasoline is produced in California having a gravity of 45 deg., Mid-continent gasolines commonly vary from 55 to 62 deg., and Eastern gasolines are reported to vary from 58 to 68 deg. Variations in gravity also occur as the result of requirements fixed by different States. The property of gravity is now recognized to be of little value as an index to the energy value of a motor fuel."

NATURAL GAS PRODUCTS

WHEN on the corners of streets in Pennsylvania towns great flambeaux flared day and night, week in and week out, month in and month out, no one gave thought to the fact that not only could natural gas be used for fuel purposes, but that it might be separated into propane, methane, butane, and ethane. However, some while since at Hastings, West Va., there was established a plant for the producing in commercial quantities of two of these products, namely, butane and propane.

The successful using of these in internal combustion engines without a carburetor but with a gas mixer substituted, shows us that we are gradually developing from a condition of know-little into a state of knowing-more, although really the future will be our period of knowing-much.

Butane and propane are now used successfully in metal cutting and welding, and it would appear according to statistics, that many orders for castings used in replacements are being eliminated in these days by reason of the successful use of these gases in repair work.

It is indeed interesting to note that while butane is used in metal cutting and welding, processes requiring intense heat, it is also used in refrigerating plants with just about three-quarters of the efficiency of ammonia. However, this is figured when the equipment required in an ammonia installation is used, otherwise the efficiency might be still higher. The domestic refrigerator has a great future, and we are told that butane can be made to play a lively part in this direction.

The Mellon Institute through its investigations has brought to light many interesting and valuable matters. In referring to certain investigations, Dr. James B. Garner has stated:

"Natural gas, as produced in the Appalachian and Mid-Continent fields, has an average heating value of 1,100 B.T.Us. per cubic foot. The enriching value of eighty cubic feet of natural gas is equal to that of one gallon of gas oil. With gas oil at 6c per gallon, 1,000 cubic feet of natural gas has an enriching value of 75c. Natural gas can be mixed with blue water gas or coal gas, easily, safely, and without any overhead, production, or depreciation charges, and is, therefore, the ideal enriching gas in regions where natural gas is available. Such use of natural gas will insure to the public for many years to come, an adequate supply of gas at a cost otherwise impossible, and this use of it will conserve, in the highest possible manner, the waning natural supply.

"There are, in nature, three potential sources of raw materials adequate for the production of a supply of artificial gas; bituminous shale, oil, and coal. Artificial gas as produced on a commercial scale consists of the following varieties—shale gas, oil gas, producer gas, water gas and carburetted water gas, coal gas and coke oven gas. Coal seems to be the only raw material which is at present available as the basis for a future gas supply, and this material, therefore, is the one to which the public can look for its supply of manufactured gas."

Genius is nothing more than our common faculties refined to a greater intensity. Haydon.

Carbon Monoxide Poisoning

How to Treat Cases of This Incomplete Combustion Poisoning

BY R. R. SAYERS

[illegible] Surgeon U. S. Bureau of Mines, P. A. Surgeon U. S. Public Health Service, and H. B. O'Brien, Car Surgeon U. S. Bureau of Mines, Assistant Surgeon (R) U. S. Public Health Service

CARBON monoxide poisoning is one of the most widely distributed and most frequent causes of industrial accidents. Carbon monoxide gas is a product of incomplete combustion, and since it is without color, odor or taste, its presence is frequently unsuspected in many places where it exists. It may be found in buildings having a leaky furnace or flues, and in buildings where a gas stove is used without a proper flue connection, such as is often found in tenements, tailor shops and boarding houses. People may be affected by leaks wherever water gas is formed or used. The exhaust gases from gasoline motors under average running conditions usually contain 5 to 7 per cent carbon monoxide, and sometimes as much as 13 per cent. Deaths from running an automobile engine in a closed garage are not infrequent.

Do not use army masks; they are valueless to resist carbon monoxide.

In spite of the common occurrence of carbon monoxide poisoning there appears to be no uniformly recognized treatment for a person overcome by carbon monoxide. In the rescue work of the United States Bureau of Mines, however, a method has been developed which has been supported by laboratory investigation, and has proved successful in practical experience over a period of years. As outlined in this article, the method is useful in the hands of first-aid men as well as physicians.

Carbon monoxide exerts its extremely dangerous action on the body by displacing oxygen from its combination with hemoglobin. Hemoglobin is the coloring matter of the blood which normally absorbs oxygen from the air in the lungs and delivers the oxygen to the different tissues of the body which need it to do their work. The affinity of carbon monoxide for hemoglobin is about 300 times that of oxygen. Because of this even when only a small amount of the poisonous gas is present in the air breathed into the lungs, much of the hemoglobin is locked up in combination with carbon monoxide and so cannot keep up its usual work of carrying oxygen to the tissues. These, due to lack of oxygen, cannot do their work properly. If they are deprived of oxygen long enough, degeneration sets in, and the damage to the tissues sometimes cannot be repaired, even though the patient may survive.

The victim of acute carbon monoxide poisoning usually experiences the following symptoms: Yawning, sleepiness, tiredness, a feeling that the skin is tightly stretched across the forehead, a frontal headache at first dull and intermittent and later more severe and continuous; later this headache is replaced or masked by a typical one at the base and back of the skull, which causes the sufferer to hold his head as far back as possible in an effort to obtain relief; dizziness, nausea, a feeling of sickness and lassitude also occur. The pulse is at first normal but later becomes full and rapid; the skin is flushed; the respiration becomes more rapid with exposure to the gas and later irregular. If the exposure is sufficiently long or the concentration sufficiently great, confusion and unconsciousness develop. As the victim recovers, he remains weak for some time; this is especially true of the leg muscles. Headache sometimes very severe, confusion of mind and partial loss of memory accompany recovery but these pass off in time. The nausea may be sufficient to produce vomiting. All the symptoms are accentuated by exercise, eating and stimulants. When a man is overcome by large concentrations of the gas the symptoms follow each other rapidly and he may quickly fall unconscious. The rate at which a man is overcome and the sequence in which the symptoms appear depend on several factors: the concentration of the gas, the extent to which he is exerting himself, the state of his health and individual predisposition, and the temperature, humidity and air movement to which he is exposed. Increase of high temperature and great humidity with no air movement tend to increase respiration and heart rate and consequently result in more rapid absorption of carbon monoxide.

[illegible]

The [illegible]

Without faith a man can do nothing. But faith can stifle all science. Amiel.

of acute carbon monoxide poisoning is to get the poison out of the blood. Every moment that it shuts the oxygen out of the hemoglobin adds to the chances for failure of respiration and failure of the heart. Every minute that the tissues are supplied with only a part of the oxygen they need increases the danger of their degeneration and permanent damage. Both to save life itself and to prevent ill health in the future, it is of vital importance to eliminate carbon monoxide from the blood as rapidly as possible.

Oxygen will take the place of carbon monoxide in the blood whenever the proportion of oxygen in the lungs is overwhelmingly greater. The speed of the change depends on the relative amounts of the two gases in the lungs and on the depth and frequency of breathing. The first step is to get the victim away from the atmosphere of carbon monoxide which he is breathing; the next is to supply him with oxygen. This may be done by getting the patient into fresh air, but only one-fifth of air is oxygen. If a tank of pure oxygen is available, it is far better to use it as the action is much faster and the after-effects, especially the headache, are much less severe and not so prolonged. The oxygen should, if possible, be given through an inhalator made similar to an anesthetic mask or Tissok Army face mask, which can be fastened over the patient's mouth, nose, or entire face. If an inhalator is not at hand, a physician may give oxygen through a nasal catheter. In the absence of any of these accessories it can be sprayed directly from the tank about the patient's face. The administration of oxygen should be started as soon as he is removed from the carbon monoxide or before, if possible, and should be kept up for at least twenty minutes.

In view of the great importance of administering oxygen to these victims at the earliest possible moment, it is recommended that all ambulances be equipped with oxygen tanks. It may be that when the victim is found his breathing has stopped, or is very weak and irregular. In this case, after quickly removing the victim to good air, or while administering oxygen, one of the rescuers should begin at once artificial respiration, by the Schaefer method. This method is described below.

Place the person* on his abdomen; remove from his mouth all foreign bodies, such as false teeth, tobacco and gum; see that the tongue is forward; turn his head to one side and rest it on his forearm, so that the mouth and nose will not come in contact with the ground, and extend the other arm forward. If the person is thin, prepare a pad of folded clothing, or blankets and place it under the lower part of his chest. Do not make this pad too thick. Do not wait to loosen the victim's clothing but begin artificial respiration without delay. An assistant may remove all tight clothing from the victim's neck, chest, and waist, and place blankets, hot-water bottles, safety lamps, or hot bricks, well wrapped in paper or cloth, about the person.

Kneel, straddling the person's thighs and facing his head; the palms of your hands are placed over the short ribs with your thumbs parallel with the spine about two inches apart and your fingers spread out as much as possible, the ends of the little fingers reaching just below the last rib; with arms held straight, swing forward slowly so that the weight of your body is gradually brought to bear on the person. This operation, which should take about two seconds, must not be violent, lest the internal organs be injured. The lower part of the chest and also the abdomen are thus compressed and air is forced out of the lungs. Now, immediately swing back slowly to remove the pressure, but leave your hands in place. Through their elasticity the patient's chest walls expand and his lungs are thus supplied with fresh air. After two seconds swing forward again and repeat deliberately about 15 times a minute.

Continue if necessary for at least three hours without interruption, or until natural breathing has been restored or a physician has arrived. Even after natural breathing begins, carefully watch that it continues. If it stops, start artificial respiration again.

While the administration of oxygen is by far the most important factor in the treatment and cannot be overemphasized, other things should be done to help the patient. He should be kept *quiet* and *lying flat,* to help his weakened heart. When he revives, he should *not* be *allowed* to *walk* about or in any way *exert* himself, for there is danger of heart failure. Heat from safety lamps, hot-water bottles, or warm bricks, rubbing the arms and legs, and keeping the patient well covered with blankets all help the circulation, and aid in tiding the body over a period of low vitality. The safety lamps, hot bricks, etc., should be well wrapped in cloth or paper as a precaution against burning the patient. Other stimulants, such as hypodermics of caffein-sodium benzoate or camphor in oil, should not be administered except by a doctor, after he has considered the possibility of overstimulation and consequent collapse. The patient should be kept in bed for a day at least. Later he should be treated as a convalescent, being given plenty of time to rest and recuperate. Just how long this time should be depends on the severity of his poisoning and should be decided by his physician.

Summary of Treatment

1. Administer oxygen as *quickly* as *possible,* and in as pure a form as is obtainable, preferably from a cylinder of oxygen through an inhalator mask.

2. Remove from atmosphere containing carbon monoxide.

3. If breathing is feeble, at once start artificial respiration by the prone pressure method.

4. Keep the victim flat, quiet, and warm.

5. Afterward give plenty of rest.

—U. S. Bureau of Mines, Reports of Investigations.

*Manual of First-Aid Instruction for Miners, Bureau of Mines, 1921.

Thought leads to resignation.—Amiel.

Appliance Sales

Gas Cooked Dinner at Bradford, Opportunity for Demonstrating Low Cost and Efficiency of Natural Gas

WHEN natural gas was sold at a comparatively few cents per thousand cubic feet, and when the volume was so great that it seemed almost inexhaustible, and when gas companies were themselves burning great volumes of gas without any consideration whatsoever as to the outcome, it was not to be expected that these gas companies could have any effective competitor. Therefore, all that seemed necessary was for the gas company to hand out the element, leaving to plumbers, merchants, and whoever would, sell the appliances, good, bad, or indifferent.

Since gas has narrowed down, and is narrowing down, gas companies are finding it not only advisable, but in many cases absolutely necessary, to themselves handle gas appliances as they are handled and have been handled for many years by manufactured gas companies.

With higher rates being charged for gas, the tendency on the part of the gas buyer is to "shop." Think of recently in a natural gas community, the writer was asked about electric ranges, believing that he might know somewhat of that subject. The inquirer had learned, or surmised that, should the commission then hearing a gas company's request for a very considerable raise in gas rate, agree to it, an electric range would be more desirable from various standpoints, the details of which we will not enter upon. This inquiry was not more a feather indicating in which direction the wind might be blowing, in fact, was blowing then and there, showing that the gas company must take a more direct hand in the details of the business than in the past.

Sell an article in a competitive field means real commercial ability not only, but it means concentration of purpose and intent. Therefore, as the natural gas field is becoming more and more a competitive field, the gas companies are finding it necessary to go before the public "commercially" in behalf of gas appliances, or actively these and the products of other fields, directly in behalf of gas. Not offering oil stoves or cooking ranges, electric ranges, electric heaters, gas ranges, gas heaters, etc., as does the merchant but with the same purpose, that of selling gas, and as a means to that end, appliances that shall keep the gas user on the mains of the gas company, rather than allow him to stray away to an alluring competitor.

Service is a thing that is awakening an increase amount of attention and is being discussed to its developments in many lines of trade. A gas company is often spoken of as a *[illegible]* of service. If this term, however, correct. Should the gas company not be a [illegible] of service, to make especially valuable to its customer the product that it sells, and the appliance that it also sells or should sell for the purpose of inducing the use of its product after the best and most satisfactory fashion?

The Peoples Natural Gas Company of Pittsburgh is a merchandising concern. It is one of the leaders in the field of selling gas appliances for natural gas use. The company has high grade talent in its commercial department. Mr. J. B. Ivory is Commercial Manager, a man of ability and excellent judgment. Assisting him as Assistant Commercial Manager is Roy J. Sullivan.

The show room of the Peoples Company is well stocked with gas appliances of as great excellence as can be found in either of the fields. The ranges are of the same high type, and in many instances are of the same make as those that for years have served the discriminating manufactured gas field. The same applies to space heating appliances of the radiant and reflector types, etc., etc.

In the old days of natural gas "everything goes" was the principle. In these days with such discriminating companies as the Peoples Natural, the Logan Natural, the Union Natural, the Ohio Fuel Supply Company, the East Ohio, the Peoples Natural, and various other companies who are selling or displaying gas appliances. Nothing goes but the best. It is an era of better appliances, better service, better selling methods, better everything in the natural gas field.

[illegible]

[illegible]

[illegible]

There is no great achievement that is not the result of patient working and waiting —Titcomb.

to audiences in a number of the states in behalf of the Manufacturers Gas Company, and its affiliated interests.

The mayor of Bradford was present, the clergy was represented, and laymen by the score. Among the speakers were Mayor De Golier, the Rev. David L. Hickrey, LL.D., Rev. F. D. Miller, Ph.D., Hon. R. P. Habgood, late Mayor H. H. North, T. J. Buck, Hon. Rufus Barrett Stone, and F. D. Gallup.

It will be noted that everything was carried on with decorum since we are informed that "Grace" at the table was pronounced by Rev. Irvine Linds.

The Mayor spoke on the topic, "What Gas Means to a Community", a subject that really is a fundamental and one that is infrequently found on programs. There seeming to be a lack of appreciation of the fact that this is a topic which should have careful and thoughtful attention and be brought to the fore, in order that due appreciation of all that it stands for should fall like a mantle upon the community.

Harking back to the old days, Mr. A. R. Johnson used as his topic, the advent of this resource in Bradford where gas has served the community for many years.

The negative side was discussed by Mr. F. D. Gallup, who took as his subject "What It Would Mean, to be Without Natural Gas." Right here we would stop a moment to say that if communities were brought fully to understand "What it would mean", they would promptly give unbounded consideration to the subject of "How May We Lengthen the Life, Continuing the Usefulness to the Community of This God-Given Supply?"

Quite naturally the Rev. Mr. Hickey viewed the matter from the "blessings" standpoint. His subject was, "Our Obligation for Natural Blessings, and the Need for Using Them as They Were Intended, and Not in a Prodigal Manner".

Hon. R. P. Habgood introduced three phases in his address, under the title of "The Public, the Utility, and the Need of Publicity".

We understand that Mr. Habgood is a man who values publicity as one of the main factors in creating public sentiment, realizing that the latter is the undisputed short-cut to good understanding between the public and the utility.

Col. F. P. Schoonmaker handled the topic of "Utility Regulation and Control", he setting forth phases in his subject which were possibly formerly not fully understood by all, indicating that "Regulation and Control" did not mean the taking away of rights, but the protecting of rights, be those rights on the side of the utilty or of the public.

A pleasing brief address by Mr. H. H. North followed the announcing of the subject "Co-operation Between the Server and the Served, an Ideal Relation". One can readily for himself imagine the trend of these remarks, the idea being a basic one, the foundation of the idea of Socialism, not Socialism as known in a Socialistic party, but the true man-to-man and brother-to-brother idea, that if practiced would bring about unlimted comfort and prosperity.

It would be unjust and unfair to those of the field, the men who physically bear the heat and burden of the day, and the chill and cold of the night, to have nothing said of "Labor's Part in the Development of Natural Resources". This subject therefore took form in the remarks by Mr. T. J. Buck.

The man in the field is to us always a wonder, the question invariably arising when we learn of great tasks undertaken and executed, "How could these men have done it, how could they have stood the cold, how could they have stood all kinds of inclement weather, and yet smile?" The old-time saying, "We must cut our coat to suit our cloth", became the title for remarks by Hon. R. B. Stone, who discussed organizations, mergers, development, etc. Mr. Stone was received with marked limited comfort and prosperity.

Swinging over into the field of "Industrial and Commercial Advantages of Natural Gas", the Rev. Dr. H. Miller of Bradford set aside al lchurchly visions and entered heartily into his subject as indicated by its title, proving that a "Reverend" may also be a man of keen commercial insight.

Mr. Parkinson acted as toastmaster and excellently well introduced the several speakers. The object was that of educating the public to the need for conserving gas while indicating how excellently well, and with how little gas a clever meal may be prepared. Those present had visible evidence before them and in them.

Among the gas companies that quite recently have come into the fold of gas-appliance-sales, is the Iroquois Natural, of Buffalo. This company has for a long period conducted an exhibition room wherein many types of gas appliances have been shown, most of them coupled with service lines, that they might be demonstrated. This work has been under the control of Mr. J. McK Reiley, who somewhile since became also Purchasing Agent for the Company. The plan formerly was to exhibit the various appliances, each with a card upon it indicating what merchant in Buffalo handled that particular appliance. More recently, however, and quite within the recent past this department has become an appliance sales department, and now the public of Buffalo will have the opportunity of buying at the gas company office, rather than being referred by the gas company to some merchant. We anticipate that one by one the natural companies will adopt this method quite in line with the workings of the commercial departments of the manufactured gas companies of the United States.

EXTENSIONS OF SERVICE

THE Public Utilities report, dated November 10th, 1921, contains data that would be exceedingly useful to any gas company confronted with the problem of main extension. There is in the report an excellent editorial, covering the principles which have been established by courts and commissions. A large number of case references are given.

Some men work hard, while others only work soft marks.

MECHANICAL COST ACCOUNTING

BY C. W. [illegible]

EVERY utility man has frequent need for recourse to the cost analyses of his department of the business, and by the study of such analyses is better able to perform his own duties whether they be operating, selling, financing or otherwise. A good accounting staff is like the lubricating oil of an engine. It may be non-productive but it pays to use a good grade.

Almost any kind of a record is good enough to file away on the dust gathering shelf of your vault, but the record that will save you money is the one that enables the operating man to know clearly and promptly what it has cost him to operate. This he should know from day to day, and in such form that operating inefficiencies may be detected and eliminated.

Property costs are of course imperative, and a cost system which does not find its ultimate result in the compilation of a continuous inventory of fixed capital leaves half the task unfinished. A company which does not know, and cannot with facility demonstrate the nature and value of its operating capital is helpless in its own defense at times of rate fixing.

This article is of necessity an abridgment of the subject of cost keeping. It deals only with a few features wherein certain machine operations have been used to advantage, through a discussion of the origin and distribution of direct charges.

Origin. Time tickets are originated by the several foremen of the Operating and Construction Departments. These are made in duplicate. They are completed in every detail by the clerks in the several bureaus, showing thereon the name and number of the employee, date, brief description of the work, the number of hours charged to each account and job order worked upon, and the amount of charge therefor. The original is sent to the paymaster, who verifies the rate of pay and total amount before crediting the employee's account. The duplicate is sent to the Cost Bureau.

This time ticket should be arranged in sections. No section to be used to record charges to more than one primary account, although more than one job order may be recorded therein if under the same account. The duplicate tickets should be printed on heavy paper and upon being received by the Cost Bureau the sections are [illegible] cut and sorted by accounts.

Storeroom requisitions for materials chargeable to more than one account should be drawn in triplicate. All [illegible] are numbered by the storekeeper and the triplicate are returned to the workman. The original and duplicate should be forwarded to the [illegible] accountants where [illegible] are priced, the original retained and [illegible] duplicate are sent to the Cost Bureau.

Cartage or delivery tickets [illegible] charges [illegible] more than one account [illegible] Bureau where the schedule [illegible] service rendered [illegible]

Distribution. The next step is the distribution or recapitulation of the above tickets to primary accounts. This in a well equipped gas office is done with the aid of an adding machine equipped with two counting mechanisms and having keys to register the date and reference number of the entry. Each group of charges being taken up separately. A distribution sheet should be prepared for each account. These sheets should be bound in loose leaf end back binder and during the posting operation are released and set in a posting tray. The advantage of having the tickets to be distributed arranged by accounts is now plain. Payroll, supplies and cartage are posted and proved separately. Each is handled in the following manner. The date, ticket number, references and amounts are listed and as each account is completed the total of the day's postings thereon is drawn down on the first counter of the machine which is automatically cleared to the second counter or grand totalizer.

By repeating the daily total for each account and picking up the cumulative total for the preceding days it is possible to keep an accumulated total for each account so that when the last day's work is added the monthly distribution is complete and ready to be transferred to the general ledgers.

The next step is the distribution to secondary accounts, i.e., construction and job orders. The record should be kept on sheets. These are bound in a loose leaf end binder to facilitate their handling during the operation of posting. The posting is done on a typewriter with columnar and total adder attachments. By this means the daily postings are proved and the proof column reflects the total posted on each order.

There is unquestionable merit in a method like the above, where the proof of postings is obtained as the entries are made.

[illegible]

INCREASED WINTER GAS RATE

BY degrees we are learning many new things, among them that an increased rate for mixed natural and manufactured gas being allowed [illegible] during the winter months. We have [illegible] billing scale, we have the service charge and [illegible] [illegible] the Louisville [illegible] where it may [illegible] If [illegible] the high rate [illegible] degree [illegible]

[illegible]

Patience is the chiefest fruit of study. Selden.

NATURAL GAS GASOLINE

An Accounting of the Volume of Output in the United States in 1920.

THE term "natural-gas gasoline", as used by the United States Geological Survey, means gasoline recovered by all methods from both "wet" and "dry" natural gas and is synonymous with "casing-head gasoline" and "natural gasoline", terms used in the trade. The Association of Natural Gasoline Manufacturers, soon after its organization, proposed the term "natural gasoline", which is now being generally used, but the United States Geological Survey considers "natural-gas gasoline" the more appropriate term.

Production

The output of natural-gas gasoline continued to increase in 1920 and exceeded that made in 1919 by 31,776,791 gallons, or 9 per cent. as compared with an increase of 24 per cent. in 1919, according to E. G. Sievers, of the United States Geological Survey, Department of the Interior. The figures for 1920, however, are subject to revision. The average daily production of natural-gas gasoline in 1920 was 1,050,170 gallons, as compared with 963,110 gallons in 1919.

Natural gas-gasoline is recovered from natural gas by two distinct methods, the compression method, which includes also refrigeration, and the absorption method. About 73 per cent. of the output in 1920 was produced at the compression plants and the remainder at the absorption plants. The compression method is applied to the "wet" gas, which contains more gasoline. The absorption method is used in treating "dry" gas, which contains only a small proportion of gasoline vapors—less than a gallon in a thousand cubic feet of gas. As dry gas can not be treated successfully by the compression method the absorption method was devised and is being used with good results.

The total quantity of gasoline produced in the United States in 1920 was 5,133,435,658 gallons. Of this quantity 4,750,123,841 gallons, according to statistics compiled by the Bureau of Mines, was obtained from crude petroleum, and 383,311,817 gallons, or 7 per cent. of the total, from natural gas. The annual output of natural-gas gasoline averages between 7 and 8 per cent. of the total annual gasoline output in the country. This percentage in itself is small, but as natural-gas gasoline has a high volatility, it is blended with refinery products, such as naphtha, and is therefore a means of utilizing these blending materials which otherwise would have less value.

The value of the total output of natural-gas gasoline in 1920, as computed from the prices received at the plants, increased $7,337,355. The value of the gasoline produced by the compression method increased $4,509,541 and that produced by the absorption method increased $2,827,815. The average price was approximately the same in 1920 as in 1919—18 cents a gallon for the total output of 17½ cents for compression gasoline, and 20½ cents for absorption gasoline.

The volume of natural gas treated in 1920 was 15,479,737,000 cubic feet greater than that treated in 1919. The volume treated at the compression plants in 1920, however, was 5,089,797,000 cubic feet less than that treated in 1919. Although less gas was used at the compression plants the production increased, indicating an increase in the yield during the year. This increase in yield was due either to a greater gasoline content of the gas treated or to a greater efficiency of the plants, or to both. The volume of gas used at the absorption plants in 1920 exceeded that used in the previous year by 8,375,199,000 cubic feet. The average yield of natural-gas gasoline per thousand cubic feet of gas was 0.042 of a gallon greater in 1920 than in 1919.

The output of natural-gas gasoline in 1920 was made by the same 12 states as in 1919. The outstanding feature was the remarkable gain by Texas, which increased its production 253 per cent. The output increased in all the states except Oklahoma, Illinois, Kentucky, and New York, where it decreased. Production in the following states increased by the percentages given: Texas, 253; Wyoming, 56; Kansas, 31.98; California, 19; Ohio, 13.8; West Virginia, 12.9; Louisiana, 5.4; and Pennsylvania, 4.3. The states in which production decreased are Kentucky, 12.4; New York, 10.2; Oklahoma, 5.6; and Illinois, 0.1 per cent.

LOW PRESSURE NATURAL GAS BURNERS

REPORTS by M. P. Youker and G. S. Brewer, of the Bartlesville (Oklahoma) Station, have been completed on the "Use of low-pressure gas burners in oil-field boilers", giving complete results of tests made with eleven low-pressure gas burners in an experimental boiler. The investigation has shown that low-pressure gas, vast quantities of which are now being wasted, can be successfully used to generate steam for drilling purposes. Results of the work show that the multiple Bunsen type of burner is the most satisfactory type tested. For any given gas pressure the capacity of a gas burner will depend on the number and size of gas jets used. The report is being prepared for printing by the Mid-Continent Oil and Gas Association of Tulsa in its Year-book. Write for an advanced copy. Ask of M. P. Youker of Bartlesville, Okla., Station.

GAS AND OIL RESULTS

AT Mexia, Tex., the Danciger Development Syndicate, a subsidiary of the Danciger Oil & Refining Company of Kansas City, Mo., one of the major oil companies, struck a well, making an initial production of 5,000 barrels daily, on their Koenig lease in northeast sector of the Mexia field.

The oil and gas pressure was so great that the well unexpectedly blew itself in before M. O. Danciger, who was preparing to drill it in, could do so. One hundred twenty-five men were used by the Texas Pipe Line Company to connect their flow lines to this well before it drilled itself in.

Human thought is the process by which human ends are ultimately answered.—Webster.

Candy Gas-Fired Furnaces

A Plea for Selling Only the Best That We May Hold the Trade

BY JAMES BLYTHE

the last few years the candy industry of this country has increased to a very great extent and gas as a factor can claim a deal of credit in the success of this industry

nsidering the confectioners' trade, especially the e manufacturing end, it is very essential that one rsh with speed in operation, this means sav ldar costs and increase in output

ler to obtain this result, combustion of our fuel se place at a high rate This is being accom- in the Blast type of furnace However, before to the Blast Burner, we will consider the At e which is familiar to most gas men

essential parts of an Atmospheric burner are the ntitude into which the gas enters and from which e through the Cocks from there to the Air hich has a gas orifice at its end, consisting of a ut with a hole in it

et in the field know, the gas flowing through ll hole in the spud has its velocity greatly in and by this means entrains air through the Mixer Mixer Pipe the mixture of air and gas then to the Burner Head where it is consumed

ts having a capacity of 150 cubic feet to 300 et are very suitable for Candy Furnaces

explanation of Atmospheric Burners will enable derstand the Blast Burner and the importance Blast Candy Furnace better than if no outline n given

Blast Burner air enters directly into the Mixer ough a cone shaped nozzle This increases its causing a partial vacuum at that point Gas s a Mixing Tee at right angles at this point and ream formed by the air nozzle draws in the gas mixes with the air Thus it will be seen that e Burner is just the reverse of the Atmospheric case of the Blast Burner air enters at a high entraining the gas at a lower pressure while Atmospheric Burner the gas entrains the air but the low pressure of the gas not enough air is d for combustion which necessitates a secondary air

the pressure and velocity of air with the Blast the rate of combustion is materially increased s turn increases the temperature and consequent speed of operation

Speed in candy making, as I have said, is very essential It not only produces a clearness of hard candies, a better product, but is more efficient, as I have also said, producing a saving in labor and increase in output

The methods of supplying air to Blast Furnaces are by the Fan-Blower and Positive-Pressure Blower Fan Blowers are considered the best as they supply sufficient air for candy cooking and can be operated at a lower cost than the Positive Pressure Blower

The Positive Pressure Blower is only desirable where air at one and one half pounds pressure is already available or where the consumer demands it A Positive Pressure-Blower requires about one horse power where the Fan-Blast requires about one tenth horse power

Summing up, therefore, the Fan Blast type of furnaces are the most desirable for most purposes due to their great speed low cost of operation and their convenience, simplicity, durability and economy

Motor Blowers are made so as to operate with 110 and 220 alternating and direct current They are directly connected and should be installed close to furnace with as few bends as possible to avoid resistance of air supply

Candy furnaces should be designed to eliminate as much loss of heat by radiation as possible

The best method of installation is by utilizing the flue gases from the furnace which pass from the fire pot into the circular flue and out the chimney The correct style of furnace is so constructed that the products of combustion must travel around the furnace before entering the chimney thus making the flame come up evenly around the kettle instead of being drawn to the side where the chimney is located

The shape of the fire pots should always be such as to reflect the heat of the flame against the kettle Fire pots should be heavily lined with [illegible] fire brick or properly designed insulation to reduce the loss of heat to a minimum Proper insulation not only saves gas consumption but is more comfortable for the candy maker

Improved furnaces are equipped with [illegible] making the furnace adaptable to all sizes of kettles The choice is to build a small kettle [illegible] the flame so that the same economy can be obtained as with the larger kettles

The Fan Blast Gas Candy Furnace [illegible] the standard appliance [illegible] the best candy makers and can take the place of coal or [illegible] furnaces at a material saving

Every man is the architect of his own fortune. Watson

While the Blast Furnace holds first place among equipment of large candy manufacturers, the Atmospheric Furnace is the best appliance for the retailer or small manufacturer. Each has its place to fill.

While the Atmospheric Burner Furnaces are not so rapid as the Blast Furnace, they are ideal for small manufacturers, and a good Atmospheric Furnace is much faster than coal or coke and above all things, is clean and sanitary.

Studies are being made by manufacturers of electric appliances to perfect an electrically fired confectioners' furnace, but from all information that can be gathered, they will not hold a candle with gas furnaces. However, the mere fact that electric men are endeavoring to encroach on the gas field, should cause we gas men to exercise every effort to see that nothing but the best gas appliances are used.

—By courtesy of Pacific Coast Gas Association.

The Industrial Field

The Sale of Gas-Furnaces—"Service," and Experience on Salesmen's Part, Important

BY JOHN B. REDD,
Industrial Fuel Engineer, Beacon Light Company

Mr. Redd brings to the attention of those who are earnest in their desire to push forward, the need for knowledge of the arts of heat-treating with gas, and advises a thorough study of the subject.—EDITOR'S NOTE.

THE sale of Gas Furnaces for heat-treating steel and forgings should be considered more on the basis of selling service, rather than taking an order for so much merchandise, on which a certain percentage of profit is made. It is not the sale of the furnace which is going to make a success of the installation, but the actual service rendered after the furnace is in operation.

Service means more than an occasional call by a gas fitter to see that the furnace is being operated satisfactorily and the burners are properly adjusted. The confidence of the user should be held to the extent that he will telephone the industrial department when any change is considered necessary as to temperature, burner adjustment, and repairing of the furnaces, or if it is desired to heat treat a different grade of steel than that which is being worked upon. If such information is requested by the user from the industrial department, there cannot be anything except a close friendly feeling between the user and the company which is selling him the fuel.

The heat-treatment of steel covers an extensive field; every observing metal worker learns something new regarding his work almost every day. Perhaps what is new to one, may be old to other metal workers for seldom do we really discover that which someone has not known of or perhaps put into actual practice many years before.

Generally steel is divided into two classes, and commonly referred to either as carbon steel or high speed steel. Low carbon steel is soft and cannot be hardened for cutting purposes, while an increase of carbon content not only makes for greater cutting endurance, but does not warp and crack easily, it is of finer fracture, and offers more resistance to machining.

The metal worker must be able to select the right kind of steel to be heat-treated for a particular purpose, keeping in mind at all times that the heating is the most important operation to insure a satisfactory finished product.

The heat-treatment of steel is usually considered under different headings, such as forging, which takes in many and varied lines of work; tool making; tool dressing; the manufacture of many parts of atuomobiles and hundreds of parts for other kinds of machines. Then we have drop-forging, which is really machine blacksmithing. The products of the drop forging industry are now used in a great variety of the mechanical arts.

Drop forging was developed about 1853 when Col. Samuel Colt adopted the process and needful machines to make parts for fire-arms. This method has shown a marked advancement within recent years, and many wonderful operations are being done with the combined use of the drop hammer, properly treated steel dies, and modern gas furnaces. Practically all cutlery is produced by drop forging while razor blades are made in the same manner, afterwards forged down by hand to the rough size, then stamped and hardened and ground to the proper size and shape. Even in grinding, great care must be observed in order not to heat the steel so hot as to draw the temper, which gives an idea as to the care necessary in the heat-treating of steel parts.

Steel of 1.5% carbon content is suitable for planing tools, drills, razors, etc. It is spoiled if over-heated and the maximum working temperature should not exceed 1,450 degrees Fahrenheit. The temperature at which

It is easy to get rich after you have the first million.

at principles find their proper issue in the faithful performance of little duties — Farrar

DESTRUCTION BY SELF-CORROSION

Self-Corrosion Not Stray Current Electrolysis, Shown at Selkirk, Manitoba

Jnl. A. I. E. E., A. G. A. Abstract

EVIDENCE has been gradually forthcoming, from a number of independent investigators, that cast iron pipe is not the indestructible material that it was formerly supposed to be by engineers; and the recognition of the possibilities of self-corrosion by responsible engineers and chemists ought to have considerable bearing upon the numerous controversions respecting damage to water pipes, gas pipes, and lead cables, which is usually charged against stray current electrolysis from electric railways, if there is a railway near enough to receive the blame for the damage.

A perplexing feature that sometimes arises in an electrolysis situation, is the persistence of pipe corrosion, at spots well removed from the pipe joints, in areas where the pipes could not have been elecrically positive to the surrounding earth. When the soil carries electrolytic salts in solution, self-corrosion is easily possible, in places where stray current electrolysis could not happen.

The facts that are now being brought to light about the possibilities of self-corrosion, coupled with the availability of recently devised methods for determining conclusively whether a pipe is positive or negative to the earth, will enable electrolysis situations to be handled in the future on a basis of proved fact instead of prejudice, fear or conjecture; and professional electrical engineers, called into electrolysis situations, will do well to bear this in mind.

The following investigation of a case of chemical corrosion of iron pipe is reported by W. Nelson Smith, consulting electrical engineer of the Winnipeg Electric Railway Co.

A party of professional chemists and engineers from Winnipeg made a personal inspection of a six-inch water main, about 100 feet of which had been recently exposed in the course of excavating for the pipe tunnel between the new Selkirk hospital and the boiler house.

As the water supply system of the hospital is secured from wells drilled on the property to a depth of 250 to 300 feet, and the piping system is entirely separated from the Selkirk water supply, and as the hospital is more than half a mile from the western outskirts of the town, and not less than 1¼ miles from the northern extremity of the Selkirk trolley line, it was said to be quite outside any possible path of stray current from the electric railway. The only electric current on the property is a 60-cycle alternating current for lighting, and the United States Bureau of Standards, it was pointed out, had proved by exhaustive and long-continued experiment, that it was impossible for an electric current of this character to cause destructive electrolytic action on buried metal structures.

The pipes examined, although they had not been laid for more than eight years, were shown to be affected by some corrosion of the cast iron, well advanced in many spots, not only near the joints but in the middle of the pipe.

The progress of corrosion was observed in its various stages, and the corroded metal in the pits eaten into the pipes was similar in appearance to the products of corrosion observed on damaged water pipes in Winnipeg. All such damage, wherever it had happened in the city, it was stated, had always been attributed solely to electrolysis from stray currents leaking from the electric railway tracks.

The presence of soluble salt crystals in considerable quantity was also observed by all the party on clay freshly excavated from the new trenches in the street in front of the hospital. The similarity of this clay and its salt content, to the clay and its contained salts as met with all over Winnipeg and vicinity was remarked upon by all present.

This water pipe had thus been imbedded in earth containing salts that are known to be chemically active, and further, by reason of its location,, had been entirely free from access of stray direct current, which can only dissolve the metal where it leaves a buried pipe to enter the surrounding earth. Stray current electrolysis was therefore, admitted to be impossible under the circumstances.

The only inference that could be drawn from the facts noticed by the party was that the observed corrosion could only have been caused by the chemical activity of the solutions of the so-called alkaline salts.

It was further pointed out that it had also been recognized for several years past, by practising civil engineers, and more recently by public authorities and the public generally, that these alkaline salts, the sulphates, chlorides, carbonates and bicarbonates of magnesium, calcium and sodium, which are widely distributed through the soil of western Canada are very corrosive to concrete made of Portland cement, no matter how carefully the concrete is mixed and deposited.

METER TAMPERING

Electrical World, A. G. A. Abstract

WHILE utilities have an undoubted right to cut off service to patrons who misuse or abuse it, the Pennsylvania Public Service Commission has declared, the charge of tampering with a meter is too serious to be sustained except upon clear and satisfactory proofs. In a case where such proofs were not sufficient to convince the commission, gas service was ordered restored. The Utah Public Utilities Commission ordered a consumer whose electric meter had been tampered with, but not, according to the consumer, with his knowledge or approval, to install protective devices on penalty of discontinuance of service.

A man is sometimes his own worst enemy, but he is more likely to be his own best friend.

DATA ON NATURAL GAS

[illegible] Bureau of Mines, Department of the Interior, the Smithsonian Institute, the U. S. Bureau of Standards, the Department of Home Economics, Ohio State University, and Dr. George [illegible], State Geologist, Harrisburg, Pa., have been [illegible]ngly open-handed in the preparing and publish- [illegible] valuable data and helpful suggestions in behalf [illegible] natural gas interests of the country, and of the [illegible] served by the natural gas companies of the United [illegible]

[illegible] following is a list of the available free leaflets [illegible]ngs, pamphlets that may be had for use in the earnest [illegible] informing the public regarding natural gas, its [illegible] usefulness. How it may be conserved while yet [illegible] serve communities in a more efficient manner [illegible] we must [illegible] pleasure in publishing the following list:

[illegible] Catechism on Natural Gas. 32 pages containing questions and answers, prepared especially for Home [illegible] workers for teaching correct use of natural [illegible] the home.

[illegible] Waste and Correct Use of Natural Gas in the [illegible] Technical Paper 257, U. S. Bureau of Mines [illegible] discussing different forms of waste and points [illegible] natural gas correctly.

[illegible] Present Natural Gas Situation. One page [illegible] graphed statement of the U. S. Bureau of Mines [illegible] 28, 1920.

[illegible] Recommendations Adopted by National Committee on [illegible] Gas Conservation. [illegible] pages giving the recommendations [illegible] with the declining natural gas [illegible] June 11, 1920.

[illegible] Semi-annual Information Bulletin 102, Part 7, on [illegible] Gas. Its Production, Service and Conservation. [illegible] pages giving the high points of the whole gas situation.

[illegible] How Natural Gas is Found, Reduced to Pressure, Transmitted and Delivered to Ultimate Consumer. [illegible] pictures of natural gas model in Smithsonian [illegible]

[illegible] U. S. Bureau of Standards' pamphlet on "How Better Service With Less Natural Gas in Domestic Appliances." 7 pages showing how better service [illegible] obtained at low pressure rather than at high pressure.

[illegible] Leaflet of Relative Costs of Natural Gas, [illegible] Gas, Coke, Oil, Gasoline and Electricity for Cooking. Department of Home Economics, Ohio State University. [illegible] 14 pages with several illustrations [illegible]

[illegible] Natural Gas. Statement of M. Keeseper [illegible] 4 pages statement of long which has [illegible] $[illegible] [illegible]

Manufactured Gas and Natural Gas Situation in Pennsylvania. [illegible] page pamphlet showing the [illegible] situation in the state from a resource standpoint.

Map showing Manufactured Gas and Natural Gas [illegible] 24x41 inches.

Poster showing Home Wastes of Natural Gas. 22 inches. Graphic presentation of some wastes of gas in cooking and in furnace heating.

[illegible] Poster of Bureau of Mines' statement on Present Natural Gas Situation. 22x32 inches. Text in poster form of statement No. 1 above.

[illegible] Poster showing Relative Cost Various Fuels for Cooking a Dinner. 22x32 inches. Gives relative cost of five different fuels and in red shows natural gas saving by use of properly directed short flames.

[illegible] Poster showing Wrong and Correct Position of Gas Flame Under Cooking Vessel. Size point 22x32 inches.

The above may be obtained free from the following:
No. [illegible] U. S. Bureau of Mines, Washington, D. C.
No. [illegible] Smithsonian Institute, Washington, D. C.
No. [illegible] U. S. Bureau of Standards, Washington, D. C.
No. [illegible] Department of Home Economics, Ohio State University, Columbus, Ohio.
No. [illegible] [illegible] Dr. George H. Ashley, State Geologist, Harrisburg, Pennsylvania.

SUPPLIES WEATHER REPORTS

THERE are some very energetic, wide-awake gas companies that are always on the alert to keep themselves in the public eye. Among the number is the Oklahoma Gas & Electric Company. That corporation supplies weather reports that in various instances reach their objective in advance of those supplied by the Weather Bureau of the U. S. *The Daily Bank* of Enid, Okla., tells of the service rendered in that community by the Oklahoma Gas & Electric Company, as follows:

"Weather data for the period ending at 8 o'clock Thursday morning as furnished by the Oklahoma Gas & Electric Company is as follows: At 8 o'clock, until 10 o'clock, 28 degrees; 10 o'clock until 7 o'clock Thursday morning, 32 degrees; 7 o'clock until 8 o'clock, [illegible] degrees."

This information is dispatched daily to the newspapers along with a report on natural gas conditions for the period [illegible] in Enid, in El Reno, Oklahoma City, Muskogee and other towns where the company furnishes natural gas service.

Geo. A. Davis, Assistant to the Vice President of the company, says: "Sometimes we are able to get the weather forecast in the papers ahead of the Government report, and the papers are very appreciative of the service."

EFFECTIVE DATE OF RATE CHANGES

[illegible]

THE [illegible] effective date and [illegible] advance.

It's much easier to lay plans than it is to hatch them out.

NATURAL GAS GASOLINE

IN casting your eye down these columns, think back but a short while and if you are a field man you will mentally see gasoline pouring down the hillsides, turned loose in order to "get rid of the blamed stuff". Read the dollars and cents figures and then gasp because of what memory brings back to you.

Note this classification of natural-gas gasoline by principal methods of manufacture.

GASOLINE PRODUCED BY COMPRESSION AND BY VACUUM 1920

State.	Plants.	Gasoline produced. Quantity. Gallons.	Value.	Aver. price. Cents.	Gas used. Estimated volume.	Aver. yield. Gallons.
Oklahoma	266	162,761,829	$28,233,143	17.34	48,363,205	3.37
California (a)	44	35,347,691	6,619,893	18.72	27,856,279	1.27
Texas	35	30,144,880	5,272,276	17.48	10,098,420	2.99
West Virginia (b)	163	15,972,833	3,169,859	19.84	11,605,174	1.38
Pennsylvania	279	10,981,461	2,128,774	19.38	5,391,467	2.04
Wyoming	4	8,175,825	1,609,762	19.68	2,345,048	3.49
Louisana	18	6,077,093	831,086	13.67	1,917,159	3.17
Illinois	92	6,054,916	1,307,980	21.6	2,889,334	2.10
Ohio	47	2,294,996	466,747	20.3	916,075	2.51
Kansas	7	1,574,482	315,906	20.1	780,820	2.02
Kentucky	6	182,927	41,997	22.95	254,091	.72
New York	4	411,078	75,576	18.38	162,463	2.53
Total, 1920	965	279,980,011	50,072,999	17.88	112,579,535	2.486
Total, 1919	1,025	261,157,587	45,563,458	17.4	117,669,332	2.22

(a) Includes 4 combination compression and absorption plants.
(b) Includes 7 combination compression and absorption plants.

GASOLINE PRODUCED BY ABSORPTION IN 1920. (a)

State.	Plants.	Gasoline produced. Quantity. Gallons.	Value.	Aver. price. Cents.	Gas used. Estimated volume.	Aver. yield. Gallons.
West Virginia	48	42,968,655	$ 9,879,692	22.99	162,714,884	.26
Oklahoma	46	14,662,995	2,847,347	19.41	36,257,061	.40
California	26	12,860,285	1,703,926	13.24	15,916,116	.81
Pennsylvania (b)	27	10,169,674a	2,253,606	22.16	55,560,230	.18
Ohio	12	7,720,642	1,727,811	22.37	39,299,254	.20
Louisiana	13	4,532,536	881,527	19.4	35,836,884	.13
Kentucky	3	4,314,393	1,029,631	23.86	18,685,194	.23
Texas	7	2,811,148	498,533	17.73	5,753,793	.49
Kansas	3			18.6		.25
		3,291,478	639,047		13,280,749	.22
Wyoming	1			23.55		
Total, 1920	186	103,331,806	21,461,120	20.76	383,304,165	.269
Total, 1919	166	90,377,439	18,633,305	20.6	374,928,966	.24

(a) Includes drip gasoline.
(b) Includes 1,650 gallons of drip gasoline, valued at $240.00.

Note in the table of compression plants that there were in 1919 1,025 plants while in 1920 there were only 965 plants. Yet nearly 280 millions of gallons were produced by these fewer plants, versus a little over 261 millions gallons by the greater number of plants in 1919.

IN OLD KENTUCKY

WE have before said of Donald McDonald of Louisville, Ky., that he is a man with large measure of intellect, a possessor of excellent judgment; that he is a leader among men. He evinced these traits when recently before the Public Utilities Association of Kentucky, he brought the following to the attention of its members. His idea is unity of not only purpose, but of action as well in behalf of one another in the utility field. Mr. McDonald said:

"Why is it that we are subject to attack more than any other business? Is it because we are lacking in the herd instinct? A bunch of cattle in the presence of danger has sense enough to gather into a compact knot and present an unbroken ring of horns to the wolf or the dog that would pull down one of their number.

"When the proposition came up in this city to reduce telephone rates, I found many in our organization who figured that if they could get fifty cents a month off of their telephone bill it would be that much more for going to the moving picture shows. I didn't find many that considered if that treatment were started as to the telephone companies, the gas and the electric companies might be the next to which it was applied and that they might lose a job or have their wages reduced. Not only that, but every holder of our securities, whether stocks or bonds, should have thought of it.

"When the Interstate Commerce Commission eight years ago turned down the request of the railways, how many of the other utilities came forward with the idea that that was not fair and if it is done it will be applied to us sooner or later? They were thinking that if we can save twenty-five cents a ton on our coal our balance sheets will look a good deal better. In other words, they were looking out for immediate matters and paying no attention to what was in the future.

"Where ever an unjust measure is proposed against the smallest company in the United States, they should have the employees and stockholders and the bond holder of every railroad, every gas and light plant and every public utility in the United States back of them, because they are all public utilities depending for the breath of life upon fair treatment and in an endeavor to obtain that for utilities we should all be united."

GAS CONSUMPTION AT UTILITY PLANTS

THE following columns of figures will give one an excellent idea of the comparative volume of fuels used by utilities during the various months throughout 1921. The table of figures was prepared under A. H. Horton of the Bureau of Mines.

	Tons Coal	Bbls. Fuel Oil	M. Cu Ft. Gas
January	2,984,154	897,088	1,707,413
February	2,629,563	781,436	1,464,682
March	2,641,588	848,866	1,548,664
April	2,416,579	843,193	1,853,783
May	2,415,009	853,519	1,994,126
June	2,434,349	916,088	2,068,248
July	2,453,945	1,026,568	1,929,148
August	2,572,569	1,145,935	2,329,609
September	2,586,033	1,179,250	2,381,628
October	2,758,774	1,181,457	2,279,880
November	2,778,860	1,145,184	2,214,282
December	2,893,380	1,193,298	1,974,827
The year	31,564,812	12,015,882	23,746,290

SPRAGUE WAREHOUSE IN OHIO

The Sprague Meter Company of Bridgeport, Conn., is opening a warehouse at Newark, Ohio, thus to best and most conveniently serve the Ohio trade. Quick shipments can be made from the new warehouse to points within the zone that this new service is to cover.

At Bridgeport the company has purchased two brick buildings adjoining the factory, thus adding buildings-area which will, when remodelled, become extensions to the company's already large and well arranged factory.

Our antagonist is our helper. Burke.

Manufactured and Natural Gas

The Gas Situation in the State of Pennsylvania is Well Described in a Co-ordinated Article Treating of the Two Great Phases of Gas That Serve Our Cities

WITH a desire to make the peoples of Pennsylvania better acquainted with the gas situation in their state, and that they might, even though superficially, yet more fully understand the means whereby manufactured gas is produced, and natural gas conserved for public good, there has been prepared with the approval of Dr George H Ashley, State Geologist of Pennsylvania, and jointly under the auspices of federal and state agencies, an excellent short story covering the Pennsylvania situation Mr Samuel S Wyer also supervised the compiling of the text which follows, and which has been put in booklet form for wide distribution throughout the state This work carries an excellent introduction by Dr Charles D Walcott, Secretary of the Smithsonian Institute, while the matter as a whole will give in the natural gas field a better understanding regarding the manufacture and distribution of manufactured gas and those in the manufactured gas field will gather a clearer knowledge of the situation in the water industry The introduction by Dr Walcott and the co-ordinated text are as follows

INTRODUCTION

The movement now on foot in Pennsylvania to promote the conservation of the mineral resources within the state has a special appeal to our interest in view of our own activities in this field Our Division of Mineral Technology was actively established in 1913 to promote an enlightened public opinion regarding the mineral resources of the country Exhibits covering some phases of these two mineral resource types are now available to the public These include coal coking operations from the green coke pile through the beehive coking ovens and illuminating gas plant to the up-to-date coking operations Our natural gas model is typical [illegible] natural gas is found, reduced to possession, transmitted to the ultimate consumer and visualizes the wastes in production and utilization that must be corrected in order to secure continuity of service [illegible] from the resource supplies still available

There is just one way to [illegible] this question and that is to carry it into the homes through the schools The Smithsonian Institution, being [illegible] the contacts to [illegible] states and local institutions [illegible]

Pennsylvania natural gas is [illegible] manufactured gas that can be made Since [illegible] water, the demand is now greater than the available supply and it is of course in the [illegible] expensive [illegible] the half million natural gas using homes in the state, to prolong the service as long as possible How to meet the declining natural gas situation and continue this service for the future is herein discussed

GAS SITUATION IN PENNSYLVANIA

History Manufactured gas was first exhibited by Michael Ambrose & Company, Italian fire workers and artists in Philadelphia in August, 1796, and first used there, as a public illuminant, in April, 1812 The Philadelphia Gas Company began operations, as a public utility, on February 8, 1836

Natural gas began as a by product of the oil industry Col Drake drilled in the first oil well in the world, August 28, 1859, on the flats of Oil Creek, south of Titusville in Venango County In carrying on drilling operations for oil, many of the wells also produced gas and it was soon applied to useful work The natural gas industry then began to develop in the early seventies

Geographical Distribution Natural gas has been developed in twenty three of the western counties of the state A large quantity of gas is imported from West Virginia and a small quantity is exported to New York and West Virginia towns

The manufactured gas using towns are in the eastern part of the state and the natural gas using towns in the western part as shown on the accompanying map

Extent of Gas Use There are over 500 natural gas using towns and over 300 manufactured gas using towns in the state distributed as shown on accompanying map

The state has about 681,000 natural gas consumers and 710,000 manufactured gas consumers, and the relative [illegible] of gas used and population served is [illegible] natural gas [illegible] manufactured gas while about 41 [illegible] the state's population [illegible] gas [illegible] natural [illegible] manufactured [illegible] natural gas is [illegible] natural gas using [illegible] the [illegible] gas [illegible] industrial [illegible] The average [illegible] 19 [illegible]

[illegible]

Genius can never despise labor. Stevens

1921. Since gas is sold in "1,000" cubic feet units, this means 6,500 "M" cubic feet. Simultaneously, with this decline, the number of domestic consumers increased from 270,000 in 1906 to 481,000 in 1921 and the number of natural gas wells increased from 7,800 to 16,200. In 1921 it took three wells to supply the same gas received from one in 1906.

Many Natural Gas Towns Too Small for Manufactured Gas. The extensive system of natural gas pipe lines, adjacent to many small towns, has given such towns the advantage of natural gas when they could never have had manufactured gas because of their small size. It is not ordinarily appreciated that it is not feasible to operate manufactured gas plants in small towns, and there are not over about 50 natural gas towns in the state that are large enough for manufactured gas plants. Neither will large manufacturing gas plants be built at coal mines to transmit manufactured gas to small towns now supplied by natural gas; not that there are any insurmountable difficulties in this plan, but it is wrong from an economic viewpoint and cannot, ultimately, be made to pay.

When natural gas is no longer available, then most of the small towns and all of the rural consumers along gas lines, must go without gas service.

Gas Industry Is Rapidly Changing. Gas for lighting should be used only in incandescent mantle burners where the illumination comes from the heated mantle and not from any illumination properties of the gas. This is much more efficient than the old open flame burner. A candle power standard is, therefore, obsolete, of no value to the public and should be abandoned.

Due to crude fuel and operating conditions, manufactured gas must rapidly go to a lower B. t. u.[2] standard and due to increasing scarcity, natural gas is rapidly going to a much smaller available volume basis. In many cases, in the interest of good gas service to the public, the now low manufactured gas pressures will be raised and the now generally too high natural gas pressures must be lowered. Manufactured gas is distributed at 3 to 4 inches water pressure and natural gas frequently 4 oz. per sq. in. and above; 1 oz. equalling 1.73 inch water pressure.

How Manufactured Gas Is Made. Acetylene—This is made by bringing calcium carbide in contact with water. One pound of the commercial carbide will produce 4 cubic feet of gas, but as this gas is of a very different type than that called "manufactured" or "city gas," it is measured by 100 cubic feet, rather than 1,000 cubic feet; it requiring many less feet to produce the equal of 1,000 feet of city, or manufactured gas. Because of its high cost and other operating limitations, it cannot be considered except for small isolated plants.

Coal Gas—This is made by subjecting bituminous coal to destructive distillation; that is, heating without access of air in externally heated, air-tight retorts. The resulting gas is withdrawn from the retorts. When the distillation is completed, a residue of coke[3]—called "gas house coke"—is left in each retort.

Coke Oven Gas—This is made in a by-product coke oven; that is, the gas evolved by the distillation of the coal in the air-tight ovens is withdrawn and saved. The composition of the gas is similar to coal gas, however, in coal gas the coke is the by-product and the gas is the main product and here the coke is the main product and the gas is the by-product. Many other commercial substances may be made as by-products from the gas.[4]

Water Gas—This is produced by bringing water, in the form of steam, into intimate contact with incandescent carbon, the steam breaking up into hydrogen and carbon monoxide.

How Natural Gas Is Found and Delivered to the Consumer. The first step in obtaining natural gas is securing a lease or right to drill a well. This lease must usually be paid for for several years prior to beginning actual drilling, on the optimistic but unproven faith that there may be gas under it. On an average, for the entire United States, every fourth hole is dry or gasless. When the well is drilled, in order to protect it and prevent the earth from caving in, an iron pipe (called a casing) is driven down through the hole, usually one-half mile deep, and into rock which is always found above gas-bearing sand. If gas is found, a plugging device, known as a "packer," is fastened in the casing or hole in the rock just above the gas sand; and the gas, because of its natural expansive tendency then comes to the earth's surface, through an inner pipe called "tubing," which is screwed into the packer. This "tubing" is then connected by underground pipe to the consumer's fixtures, generally many miles away.[5]

The gas is never at rest, but is a constantly seething, moving mass, traveling in the mains at enormous velocities—at a speed many times exceeding that of the fastest trains—and requires constant attention at the well and until it is burned at the consumer's fixtures.

When the gas is removed from the gas sand, the natural pressure—called rock pressure—must decline. As the gas travels through the pipes the friction causes the pressure to drop. These two features require the installation of expensive compressors for raising the gas pressure so as to compel it to travel to the ultimate consumer. The compressor is a mechanical device to squeeze or compress the gas into a smaller volume, and provide enough pressure to make the gas flow through the pipe.

In no case is the gas found in rooms, caverns, or large crevices, as popularly supposed. The gas sands are simply very porous rocks which contain millions upon millions of microscopic cavities, so that the gas occupies

[2]The British Thermal Unit—B. t. u.—is the heat required to raise a pound of water 1° F. and is universally used in America in engineering work as the yard stick for comparing heat values. The Calorie (sometimes called large Calorie) is universally used in food problems—one Calorie equaling 3.96 B. t. u. This Calorie is the heat required to raise a kilogram of water 1° C. and is 1,000 times larger than the gram calorie or small calorie universally used in scientific work

[3]Coke is merely the solid residue left when bituminous coal is heated without access of air.

[4]For further discussion see "Creative Chemistry," by Edwin E. Slosson; also Smithsonian Institution (Washington, D. C.) Bulletin 102, Part 1, on "Coal Products and Object Lesson in Resource Administration."

[5]For further discussion see Smithsonian Institution (Washington, D. C.), Bulletin 102, Part 7, on "Natural Gas: Its Production, Service and Conservation." The Smithsonian Institution has a large model showing these various steps. Pictures of this with detailed description can be secured for the asking.

It is only people who possess firmness who can possess true gentleness. La Rochefoucauld

The shadow of trouble is usually larger than the trouble itself

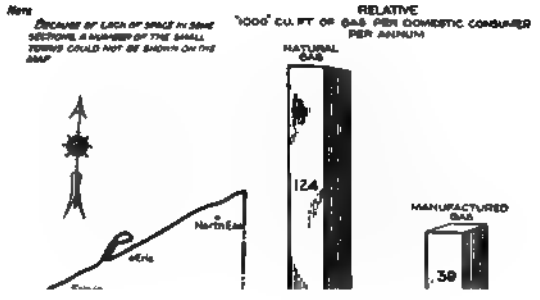

NATURAL GAS AND MANUFACTURED GAS USING TOWNS

IN

LEGEND

- NATURAL GAS USING TOWN
- TOWN - COAL GAS, WATER GAS OR COKE OVEN GAS
- TOWN - ACETYLENE GAS

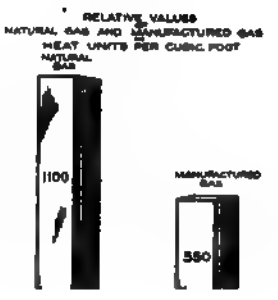

He who has imagination without learning, has wings and no feet. Attwell

U. S. Bureau of Mines Directions for Coke Use. Instructions on how to handle coke in the home have been carefully worked out by the U. S. Bureau of Mines.[17]

> "The only way to eliminate smoke in large cities is by using smokeless fuels—a fuel that will burn without producing smoke in any equipment now in use. Coke should be used for heating houses because it is a clean and convenient fuel; it eliminates smoke, reduces the necessity of cleaning the furnace and flues, requires less attention than coal and gives more uniform temperature in the house. By burning coke for domestic heat, more soft coal will be used in by-product plants which will save many by-products that are wasted when coal is used directly in the raw state."[18]

The proper use of gas and coke in the home will bring about the necessary public sentiment that must be crystallized in order to effectively control the industrial smoke problem.

[17]Technical Paper 242, "Why and How Coke Should Be Used for Domestic Heating"—U. S. Bureau of Mines, Washington, D. C.—17 pages of data giving operating details on how to use coke successfully for domestic heating.

KANSAS CITY CONVENTION

OF course, everybody knows that the Natural Gas Association is going to Kansas City for the week of May 15th, and probably supposes that what remains to be done is simply to plan the details, sound the trumpets, and get the crowd.

The foregoing three features might at first glance seem easy enough, but when it comes to converting an almost round, or partially oval area into an exhibition space, subdivided in a way to provide satisfactory spaces to those who will exhibit, and to make quarters which are not a big flat open area like the remarkably excellent auditorium at Buffalo, into a great exhibits show-room, is no child's job.

The preparing for an exhibition means not simply selecting the hall, but simply carelessly and superficially laying out the diagram,—it's a real engineering job.

Now when it comes to arranging the details of the convention sessions, again we have a man's job. The President, in this instance, must visualize to a tremendous extent, he must mentally discern what is most necessary, and pertinent, for there are many subjects from which to select, yet little time in which to present papers and subjects. Those attending the convention must have sufficient time to properly examine the exhibits, as well as attend the sessions, making necessary few and short sessions.

The President not only must sift the many topics available, in his finding of the very most important ones, but he must also find the right men to present these subjects, men who are qualified from the standpoint of knowledge and experience and likewise, men with ability in the line of verbally presenting topics in a manner to hold attention of an audience; not in a way to make the presentation prosy, or unattractive.

The President must select men who are not overgiven to the presenting of statistics and figures, but rather one who can transform figures and statistics into an acceptable word-message.

Next, the President must find others who are especially conversant with each respective topic to be presented, and communicate with such with a view to their taking part as leaders in the several discussions. In fact, while to those sitting in the seats at a convention, it may seem that the President has simply to wield the gavel and look pleasant and try to please everybody; the real facts are that the President has on his hands from a period way back of the convention sessions through to the time when he takes his hat and coat from the peg and retires as President, a great big job, unless the President is willing to simply allow the meeting to run itself, and this President L. B. Denning of the Natural Gas Association would never stand for.

In a personal interview with Mr. Denning in Pittsburgh, a few days since, the President said that his general plan will be merely a handful of salient topics, each to be presented by a man of wide, yet of detail experience in each particular line, the four lines Mr. Denning mentioned as already decided upon being, "Production," "Transportation," "Distribution," and "Public Relations," these to be "set" papers, and one will easily note the logical sequence, when reading the list from first to fourth number.

Mr. Denning takes the ground that there should be selected leaders to handle the discussions following the respective "set" papers, a separate leader for each of the discussions; each leader experienced and well versed in the line. The President purposes relinquishing the chair at the beginning of each of these set discussions. His thought is to invite each man chosen to lead the discussion, to occupy the chair of the President for an hour, that being the time set aside for the discussing of each of the respective papers. Thus if four "set" papers are decided upon, the President would relinquish his chair four times to four distinct and separate discussion-leaders. This is a new and clever idea.

Mr. Denning said, "This is a western gas man's meeting. The West wanted the meeting, the West will have the meeting, and the West should take a very interested part. At the same time, however, the eastern gas-man and the eastern equipment man should earnestly do all within his power to make this a notable meeting, and to cause the western man to have the feeling, which does exist, that there is no east or west other than that laid out in the geography; merely a physical, not a mental or industrial east or west, for we are but one."

The Chamber of Commerce of Kansas City, the hotels of Kansas City, and the interests of the West are fully alive to the desirability of making the Kansas City meeting a "hummer." President Denning in our chat the other day used this same expression, "Let's make it a 'hummer'!"

Power admits no equal, and dismisses friendship for flattery.—Moore.

PATENT GRANTED

GOING VALUE PREDICATED ON EFFICIENCY

The wings of thought bear us on to action

TEMPERATURE COOKING

IN our next preceding number we published an article, entitled, "Dependable Heat Control." A number of letters have been received by us commenting favorably upon this article, and now we are hitting-it-up again under a different title, though the subject is quite the same.

With the means what they are for absolutely controlling electric heat, this competition in the field of heat-treating appliances, under which gas ranges would naturally come, must be met. It is of vital importance that the gas industry should at all times have the equivalent available to the users of, for instance, gas ranges.

For years the National Stove Company of Lorain, Ohio, has equipped its range-ovens with a thermostatic heat-control, in order that users might practice the art of automatic temperature-cooking rather than to bake by guess-work or intuition, whichever one would wish to term the art as known to the old-time cook who "judged" her oven.

We have, however, found the American Stove Company interests welcoming rather than resenting the increase in number of heat-controlled gas ranges being offered by other manufacturers, even though it now leaves them far from alone in the field of supplying ranges thus equipped.

The very fact that thermostatic heat-control has so grown in popularity, places upon it the stamp of approval. Thus manufacturers and buyers alike grant that the system when first introduced was a stride in the right direction.

As yet there are many of "the old school" who will be converted; that is always the case when a new device, or a device that is comparatively new is brought more generally to the attention of the people. These will, however, rapidly come into the fold.

In these days when so very large a percentage of housewives, both young and old, are doing their own cooking, and the "old mammy's art" of "judgin'" of oven-heat, has passed, or is passing away, this new method, heat-control, should find a ready welcome. It is not a fad; it is a thing that is practical; it has come to stay and is rapidly being adopted by many in the trade. The need in the gas-field is that not one step should be permitted on the part of electric interests that has not its equivalent or its superior to be found in the gas field.

Already we not only find the electric range in the home, in apartment house kitchens, etc., but there has come to us within the last few days an announcement that the Dunwoody Institute at Minneapolis, Minn., has installed a 25 k. w. electric range to take care of the cooking requirements in the school cafeteria. This will mean directing the attention of pupils to electricity for cooking. Gas companies should be on the alert to prevent public institutions so far as possible from being induced to equip their plants with electric cooking equipment.

The spirit among manufacturers seems to be broad-tread and of the right sort, for here is a paragraph we have extracted from a letter received a few days since from the Robertshaw Manufacturing Company, makers of oven-heat control thermostats:

"As manufacturers of thermostats for many years and as pracically the oldest manufacturer of mechanical thermostats for controlling temperatures in ovens, we have read with interest your remarks on Oven Heat Controllers, on page 30 of your January issue. No one knows better than ourselves the amount of work and the quality of the work that has been done by the manufacturers and producers of the Lorain Oven Regulator. Being practically the only manufacturers in this line for years, we know what it is to play a lone hand, and we feel certain that, whatever part we play will be of assistance, not only to the gas industry and particularly range manufacturers, but our work along this line will be of help even to the American Stove Co. You can count on our 'boosting the principle,' as you state, because for several years to come, it will be necessary to boost the idea and not any one particular type of oven heat control. We do not think there is a manufacturer of stoves or a manufacturer of thermostats or oven heat controls who is not greatly indebted to the American Stove Company. As we have stated, we have been fighting a lone hand for years, and we know that their advertising and their constant work with the Lorain Oven Regulator has been of assistance to us, not only in the matter of oven regulators, but in bringing the thermostat for any domestic purpose more prominently before the general public."

From the other side of the fence comes the following; it's from an American Stove Company man:

"The article, 'Dependable Heat Control,' is good. It touches the right chord.

"You will be doing the gas field a benefit if you keep at it along this line. We cannot expect you to mention 'Lorain' in your editorials, neither do we ask it.

"Our only wish is that you further the movement for precision of cooking as against the old method of guess-work. Styles change; new modes come into vogue, and if we read the times correctly, 'Time and Temperature Cookery,' the new style of cookery, is fast displacing the old.

"Very well, if you in your editorial can exhort your readers to adopt precision appliances as *a principle*, we are content, *and will rely on our ability as merchandisers and advertisers, to get the message over*, that, 'when buying a heat-measure, always select "Lorain."'

"Your's really is the first frank decision of this new trend in gas appliances. We hope you can follow it up for the good of the gas business, because the 'service' that a heat measure affords, gives to gas a new lease of life. With heat appliances on the ranges, no gas company need fear electric competition."

The magazine editor may tell of the principle involved, but it's up to the manufacturer to put his sales on.

Power cannot have too gentle an expression.—Richter.

AROUND THE BELT

New Wells, New Pipe Lines, New Contracts, Additions and Extensions. A Fund of Valuable News Gathered for the Journal Through Many Sources.

RADE PERSONALS

ales I H has been appointed Conservation the gas field recently developed south of the ankawa Okla and west of the city of Bliss, Mr Chinkscales will make his headquarters at ty Okla

n, N I Manager of the El Reno Division of homa Gas & Electric Co has been elected of the Chamber of Commerce at El Reno he Mr Garrison's fourth term as President amber of Commerce

I V has been appointed Assistant Manager quitable Sales Company Pittsburgh, Pa

Elwood formerly a member of the natural ments and now President of the Haynes Auto ompany and other interests has been elected member of the American Society for Steel

n, I F is President and General Manager Seto Oil & Gas Company recently organized ville Fla

C has been appointed Manager of H M & Company's eastern offices Mr Lewis will headquarters in New York City

I V at the annual meeting of stockholders of ison Natural Gas Company, Pendleton, Ind. elected Vice President of the organization

H B has been elected Vice-President, Man ector and Chief Engineer of the Canadian Natural Gas Light Heat & Power Company Alberta

Beecher P who was connected with the Gas & Electric Company Louisville Ky lately he Publicity Department of H M Byllesby & Chicago Ill

I has been re elected President of the Natural Gas Company Pendleton Ind

George N Manager of the Richmond Divi he Western States Gas & Electric Company Cal was recently appointed on the City Commission of that city

P V has been elected Vice-President of Oil & Gas Company Jacksonville Fla organized

Oscar has been appointed to take charge of Supply Company of northwest territory and at Casper Wyo

Ira has been elected Vice President of the National Supply Company, and will in future be located at Independence Kan, the headquarters of the company Mr Wetherill was formerly in charge of the company's affairs in the northwest, being located at Casper, Wyo

Yost, F I has recently become representative for the Kompak Company of New Brunswick, N J in Pittsburgh Mr Yost was previously connected with the Equitable Gas Company of the same city in the capacity of Industrial Representative

ELECTED

INDIANA *Pendleton* The stockholders of the Pendleton Natural Gas Company at their annual meeting re elected the former officers They are President, J J Rogers, Vice President I V Mavo, Secretary R F Thomas

PENNSYLVANIA *Sykesville* At the annual meeting of the Sykesville Dubois Oil & Gas Company seven members of the Board of Directors were re elected The new member elected is Frank D Leipold of Clearfield Pa

INCORPORATED

DELAWARE *Wilmington* The Vanter Oil & Gas Company has been incorporated with a capital stock of $[illegible] The Corporation Trust Company of America is agent for the new concern

FLORIDA *Jacksonville* The De Soto Oil & Gas Company has been organized with a capital stock of $10,000 The officers of the new concern are President and General Manager [illegible] Vice President P V Summers Secretary Treasurer H [illegible]

OHIO *Marietta* The Sterling Oil & Gas Company has been incorporated [illegible] capital $10,000 The incorporators named are H [illegible] M Taggart and M [illegible] Fletcher

OKLAHOMA [illegible] The [illegible] capital stock $25,000 has been incorporated [illegible] W H Tuggle and George A [illegible] and I M Sackett [illegible]

WEST VIRGINIA [illegible] Development Corporation has been formed with a capital stock of $100,000 The incorporators are H C Zigg [illegible] Riley S H Mullen [illegible] Scott and A Bennington all of North Charleston

Reason teaches us to be silent; the heart teaches us to speak.—Richter.

PER CUBIC FOOT—RATES

ARKANSAS—*Fort Smith*—An increase in its rate from 8 cents to 10 cents per thousand has been granted the La Salle Oil & Gas Company, which delivers its product to the city line. The company's request was for an increase of 15 cents per thousand.

PENNSYLVANIA—*Pittsburgh*—The rates recently adopted by the Equitable Gas Company, the Allegheny Heating Company and the Monongahela Natural Gas Company are 53 cents per thousand, less 3 cents per thousand for prompt payment, and lower rates for larger consumption than 200,000 cubic feet per month. The former rate was 47 cents per thousand. The prepayment meter rate has been increased from 25 cents per 500 feet, to 25 cents per 425 feet.

Pittsburgh—Permission has been secured by the Hope Natural Gas Company to increase its industrial gas rate from 28 cents per thousand to 30 cents per thousand.

Sheffield—The Crescent Gas & Oil Company has been granted permission to increase its rate from 45 cents to 50 cents net per thousand. This company supplies Monaca, Colona, Wireton, Monaca Heights, Glenwillard and South Heights as well as this city.

NEW FRANCHISES

KANSAS—*Arkansas City*—The Kansas Gas & Electric Company has been granted a thirty-five year natural gas franchise in this city, as well as in Cherryvale.

OKLAHOMA—*Sulphur*—The Cozart Service Company, it is reported, is seeking a natural gas franchise in this city.

TEXAS—*Ballinger*—The Russell Production Company has been granted a franchise under which it will supply this city with natural gas from the Russell field, located fifteen miles from the city.

The company in its No. 1 well in this field developed a good supply of gas and oil, and is now drilling a second well.

GENERAL

CALIFORNIA—*Long Beach*—The Shell Company has a good gasser in its No. 1 on the Wilbur property. The Southern Counties Gas Company has contracted for the major portion of the output of the well.

COLORADO—*Denver*—A proposition is being considered here which contemplates the bringing of natural gas to the city from the Lost Soldier and other Wyoming fields. It is estimated that the cost of building a line from these fields to the city would approximate $10,000,000.

GEORGIA—*Fort Gaines*—It is reported that the matter of drilling for gas on the banks of the Chattahoochee River is under consideration here by local capitalists.

KANSAS—*Erie*—The properties of the Southwest Gas & Fuel Company have been purchased by E. A. Eakin. Mr. Eakin is largely interested in Allen County as a producer.

Hutchinson—According to report, the Kansas Gas & Electric Company has taken over the properties of the Newton Gas & Fuel Company and of the Hutchinson Gas & Fuel Company.

Longton—A large gasser has been completed by the Southwestern Gas Company on the Davis lease, section 7-30-11, near this place.

Neodesha—The gas being produced in the Neosho Falls field, newly opened, has been contracted for by the Hale Gas Company, which serves this city with gas. The company has under construction the line which will convey the gas to the city.

KENTUCKY—A Senate bill introduced recently gives a person or persons furnishing work or labor to leases holding or owning leaseholds or any right on oil, gas or other minerals, a lien on leaseholds to secure payment.

LOUISIANA—*Caddo Parish*—The Arkansas Natural Gas Company is drilling a deep test on the Ardis and Lay lease, section 2-21-15, Pine Island district. The drill has reached a depth of 3,165 feet.

Coushatta—Natural gas service has been established here by the United States Drilling Company.

Perryville—It is reported that the Stovall Trustee No. 2 well, recently completed, has a capacity of around 40,000,000 cubic feet. The location is near the Ouachita-Morehouse parish line.

Shreveport—No. 1 of the Terry Summerfield Oil Company on the Smith lease, something over four miles east of El Dorado, is reported good for 10,000,000 cubic feet at a depth of 2.207 feet. It has been reported that the well has been purchased by the El Dorado Natural Gas Company, which will market the product to concerns drilling wells in the field.

MASSACHUSETTS—A Senate bill is introduced to prevent the pollution of fresh and salt waters by refiners or dealers in petroleum and other products.

A House bill is introduced providing for an excise tax upon gasoline and other products used in the propelling of motor vehicles.

NEW YORK—*Albion*—Test drilling has been put under way on the Delzon Hobby farm at Gaines. Other interests have also leased property in this vicinity and are making investigations as to the possibility of developing oil and gas.

Never argue with a man who talks loud. You couldn't convince him in a thousand years.—Exchan

[illegible] Dickinson, Peck & Dougherty [illegible] well in the Valley District [illegible] The gas was developed at a [illegible]

[illegible] The Rose Valley Oil & Gas Company increased its capital stock from $50,000 to [illegible]

The Morrell Preston Company has completed a gasser on the Guthrie land at a depth of [illegible]

[illegible] The work of piping the natural gas distribution is being rapidly pushed along. Producers Company. The pipe line [illegible] the city with the company's wells nine miles [illegible] completed.

[illegible] It is reported that the Chickasha Gas Company has constructed a line connecting its [illegible] the Oklahoma Natural Gas Company [illegible] supply of gas from the latter [illegible]

[illegible] the properties of the Quapaw Gas Company. Messrs. [illegible] and Cogan have been purchased [illegible] and George E. Boswell the [illegible] of Messrs. [illegible] the latter of Coffeyville.

[illegible] have completed [illegible] section 23 in Ow[illegible] Gas has been modified and [illegible] the [illegible]

[illegible] improvements to the [illegible] Oklahoma Natural Gas Company [illegible] the new construction is [illegible] Messrs. with the [illegible]

[illegible] drilling [illegible] this city is [illegible]

[illegible] expects a [illegible]

[illegible]

[illegible]

[illegible]

[illegible]

[illegible]

[illegible]

Pittsburgh County. The Quinton Relief Oil & Gas Company, it is reported, has not been compelled to abandon the manufacture of carbon black in the Quinton field following an order by the Corporation Commission revoking a previous order granting the company permission to use not over 100,000 cubic feet of gas per day in its carbon black plant.

Ripley. Natural gas service was recently established in this city with the completion of the line connecting the city with the supply from the field.

PENNSYLVANIA. *Clarion County.* J. W. Neely has completed a good gasser on the Leslie Brothers farm in Pine Hollow section. The gas was found in the fourth sand. The output has been contracted for by the Pennsylvania Fuel Supply Company of Emlenton, Pa.

Location has been made by Mr. Neely on the Leslie farm for a second well.

Greenville. With an eye to the future, when the local natural gas supply will have probably dwindled, service to the Greenville Gas Company is undertaking a number of important improvements in its distribution system. All of the work is planned with a view to distributing manufactured gas. A new gas holder is also to be erected.

Mercer. According to an order by the Public Service Commission the United States Natural Gas Company will continue supplying gas to the Mercer Gas Light & Fuel Company, which in turn distributes the product in this city. The order preserves natural gas service to more than 600 residents of the city and surrounding territory.

Washington County. In Canton township, Hughes and Day have a gasser in the fourth and fifth sands at a second test on the S. C. Johnston farm.

In Canton township, the Keystone [illegible] Oil and Gas Company has a light [illegible] well in the Gantz sand and a small gasser in the Berea sand at No. 3 on the Wesley Lear farm.

Washington. The Pittsburgh [illegible] this city has completed its No. [illegible] on the Kenney State [illegible] Baltimore sand at a depth of [illegible] [illegible] $100,000 [illegible] gas pressure.

TEXAS. *Dallas.* [illegible] plant [illegible] Dallas.

[illegible] the Atlas [illegible] Company will [illegible] $500,000 [illegible] natural gas [illegible] Texas.

[illegible] The Lone Star [illegible] natural gas [illegible]

There are no astonishing ways of doing astonishing things. Haydon.

place. Gasoline will be recovered from gas that is piped to Fort Worth and Dallas for distribution.

Marshall—The gas pipe line connecting this city with the Bethany gas field was recently completed. An enthusiastic celebration was held on the day the line was pronounced ready for operation.

Marshall—The Industrial Gas Company, it is reported, has completed a very large gasser in its No. 2 well on the Tiller property in the Bethany-Elysian field.

San Antonio—In McMillin and Live Oak Counties, this state, M. M. Sweetman of Kansas City is reported to have leased 50,000 acres of land on which something like 100,000,000 cubic feet of gas are already being produced. It is reported that the plan is to market the gas in this city.

Stephens County—The California Petroleum Company has completed a large gasser in its No. 2 on the Brown tract, near Eliasville.

Webb County—No. 2 well of the Schott interests came in with an estimated production of 35,000,000 cubic feet. The well is also making around thirty-five barrels of oil a day.

WEST VIRGINIA—*Monongalia County*—The Clay District Oil Company, drilling into the 50-foot in its test on the Samuel Stull farm sand developed some gas, but discontinued drilling and is utilizing the gas developed.

In Clay district, the Hope Natural Gas Company's test on the I. B. Wright farm is a gasser in the Bayard sand.

Marion County—In Paw Paw district, the Ownes Bottle and Machine Company has a gasser in the Big Injun sand at a test on the W. D. Barbe farm.

Monongalia County—In Clay district, the Hope Natural Gas Company's test on the Ruth Stephents farm is a fair gasser in the Bayard sand.

Morgantown—An explosion at the compressor station of the West Virginia Utilities Company located near Guston Run and Barker recently, caused the death of Glenn Sutton of Morgantown, W. Va., while Charles Kiger was seriously injured. The plant is totally wrecked, the loss being estimated at $100,000.

Domestic and industrial consumers suffered considerable inconvenience when operation of the plant ceased.

Ritchie County—On Alum Fork of Coal Run, Union District, the Hope Natural Gas Company drilled its test on the J. M. Boyce farm through the Big Injun sand. It is a gasser in this formation. On Hughes river, the same company's test on the Sarah Colgate farm is thru the Gantz sand and dry.

On Hughes river, Union district, J. T. Locke and Company have completed the No. 1 well on the D. R. Estebee farm in the Big Injun sand and have a gasser. In the same district on Alum Fork of Bone Creek the Hope Natural Gas Company has completed the No. 1 well on the Oth Hickman farm in the Big Injun sand and it is a gasser.

In Grant district, Norris & Mercer have a gasser in the Big Injun sand at a test on the Asa Parks farm. In Clay district, J. B. Yates & Co.'s test on the E. E. and L. J. Wells farm is a gasser in the Big Injun sand.

Ritchie County—In Union district, the Hope Natural Gas Company has a gasser in the Salt sand, at a test on the Okey Garner farm.

In the same locality the Philadelphia Oil Company's test on the J. W. Bush farm is a good gasser. The same company has a gasser in the Big Lime at second test on the Smith Good farm.

Roane County—In Reedy district the Heck Oil Company, after drilling its test on the S. D. Sheppard farm to a depth of 2,909 feet and failing to find oil or gas, has abandoned the hole.

Tyler County—On Middle Island Creek, Centerville district, the Bond Oil Company has completed a test on the B. S. Smith farm. It is a light gasser in the Big Injun sand.

Located in Flemington district, the Hope Natural Gas Company has a gasser in the 50 foot sand at a test on the Emma V. Randolph farm.

Wetzel County—The Carnegie Natural Gas Company's test on the J. E. Williams farm is a gasser in the Gordon sand. In Church district, the Miller Gas and Oil Company has a gasser in the thirty-foot sand at a test on the Belle Robinson farm.

The Eastern Petroleum Oil Company is finishing the Number 2 well on the Kuhn farm. They got a light schowing of gas, but went deeper only to find a dry hole. The well was plugged back to where the gas was found, and shot. It is a fair gasser.

Wetzel County—In Clay district, the Johns Oil Company has a gasser in the Big Injun sand at a test on the Harvey Antill farm.

In the same locality the Ellis Miller Company got one of the same kind at a test on the C. Robinson farm. The Carnegie Natural Gas Company has a rig completed for a test on the Ann Welch farm.

Wheeling—It is reported that 1,600 acres of land, two miles northeast of Flushing, in Harrison and Belmont counties have been purchased as oil and gas land by Samuel Brokaw, of Flushing, acting for George Anderson and Fred Andree, of Pittsburg, Texas, oil and gas operators.

The land adjoins the old Uniontown field on the east and south, and on the west is adjacent to the Octo Oil company fields.

WYOMNG—*Casper*—It is reported that the Ohio Oil Company has under construction a pipe line 72 miles in length, extending from the Elk Basin field to Billings.

ALBERTA—*Ponce Coupe*—Imperial Oil, Ltd., reports a good gas flow in its test on Pouce Coupe Creek, section 73-13-5. This is the first well drilled by the company in this section. A second well is reported under way in another portion of the section.

Great works are performed not by strength, but by perseverance. Johnson.

What the People's Money Will Do

IN the days of old Mother Hubbard, there were shortages of the necessaries just as there are shortages in the present day. In "Mrs. Hubbard's" instance it was a bone that was required. In the case of gas interests in these later days, as has also been the case in all times since wampum and other equivalents were produced to be used in exchange for labor, supplies, etc., it has taken money to make the mare go.

Gas interests of late years have often gone to the cupboard to find the wherewithal to pay their faithful employes and the wherewithal to pay for needful supplies and equipment, and have found it bare.

During the last year, however, many gas companies have received advances in rate per thousand cubic feet. These advances have not been the with-which to line their pockets, but to make possible needed expenditures for development and reasonable dividends to investors.

The outcome of many favorable decisions on the parts of utilities commissions and local town or city councils, is that whereas little was being done in the drilling of new wells and toward expanding the industry, now indications point to a very different condition.

The higher prices that are now being paid by individuals and institutions for gas, has by no means cut down the demand; it has in some instances reduced the unit-volume of consumption per gas-range or other piece of gas-equipment, but with every foot saved at these burners there has arisen demand for gas for more purposes, and more are becoming gas users, graduating from the hard fuel stage into the stage of not simply desiring but requiring gas-service.

Though the public may not realize it, there has arisen a great force in their behalf out of the small unit advances that individuals are paying. In manufactured gas districts, the gas conditions in communities are improved as is also the case in communities served by natural gas.

Both wings of the vast enterprise in the United States have in these few years past been sufferers, and as a consequence the domestic consumers of gas and likewise the industrial consumers have as well been sufferers on the basis that it is impossible to prevent the entire body from suffering to a more or less extent if there be ailment, even though localized in a way within the general body afflicted.

We are now certainly emerging from a long, trying experience. The sins of under-pay have been visited upon the utility companies by the public and through them upon the public again; a regular "round robin," but things are righting themselves and the cloud that has hung low is lifting, even if it is not as yet very rapidly passing away. It must lift first and that's the transition state of today, favorable winds will finally drive the clouds out of sight and ours will again be sunshine.

Lucius S. Bigelow

THE NATURAL

GAS INDUSTRY

TRANSPORTATION — GASOLINE PRODUCTION — DISTRIBUTION

SUBSCRIPTION—
$2.00 IN THE U. S.

VOLUME 16
THIS NUMBER 3

CONTENTS FOR MARCH, 1922

PUBLISHER'S NOTICE

PUBLISHED MONTHLY.

Advertising Copy should be in by the 5th of month previous to issue.

SUBSCRIPTION RATES: In the United States, $2.00; foreign countries, $3.50; Canada, $3.00.

ADVERTISING RATES on request.

CORRESPONDENCE IS SOLICITED from all those interested in Natural Gas and kindred industries.

Buffalo Long Distance (Day) Bell Telephone, Tupper 6866

Cable Address:—"Publight, Buffalo."

Address General Correspondence, Editorial and Advertising Matter to Central Office.

PUBLISHED BY
PERIODICALS PUBLISHING CO.,
BUFFALO, N.Y.

LUCIUS S. BIGELOW, *President and Editor.*
HARRIS S. BIGELOW, *Vice-President.*
A. CARYL BIGELOW, *Secretary.*

Entered as second class matter December 1, 1910, at the Post Office at Buffalo, New York, under the act of March 3, 1889.

CONTENTS OF THIS ISSUE

INDEX OF PAST 1922 ISSUES

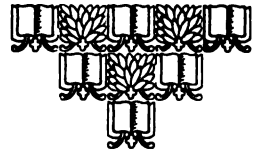

NATURAL GAS CONVENTION

THE diagram of booth-spaces is now in the hands of the manufacturing interests of the natural Gas fields, indicating the lay-out of the convention hall at Kansas City where the exhibits will be shown and the sessions held during the convention, May 15-18. The prices for booths range from seventy-five dollars to two hundred and fifteen dollars, there being booths also available at eighty, eighty-five, one hundred, one hundred and five, one hundred and fifteen, one hundred and forty, and one hundred and fifty dollars each. If we mistake not, the rates are somewhat higher this year for both spaces. If this be true, then we assume that such may have been made necessary by virtue of the fact that the area does not lend itself in form, as well to the needs of manufacturers requiring large space as in an auditorium with square walls, this resulting in, perhaps, two conditions, fewer spaces with no shrinkage in overhead; thus word has come to us.

The convention at Kansas City is going to bring a lot of new blood to the convention sessions and to the exhibition.

Men will be present from those southwestern districts and the northwest, who, we presume, have never before attended a convention of this Association, unless perchance a few of the "old guard" who were present years ago when the Association held its convention in Joplin, Mo., or conventions in Kansas City, etc.

In those earlier days there was a close-knit feeling, every member knowing that he was a factor because the membership was smaller, and, although there were no exhibits of any consequence shown in those days, the desire to be present at the convention, in order to meet friends and "talk-over-matters," was very great, and helped to compensate for the fine exhibits of equipment and supplies and the "free-lunches" of these later days.

In going back to Kansas City we shall be returning to old haunts and familiar scenes, save for the fact that Kansas City today is a bigger city and a city with more varied business interests than in times gone by.

Kansas City was a busy city when formerly we met there, but its interests were not so varied as at present, therefore we shall this time find outside of the convention hall and outside of exhibition hall many things of interest that our western friends will wish to show us.

We understand that manufacturing interests and gas interests in the southwest and the norhwest will line up in fine shape to greet the eastern interests, both manufacturing and gas, with a real western hospitable "howdy!"

On the main floor of Exhibition Hall there are sixty-six exhibition spaces, then in the west arcade there are twenty-nine booth-spaces, and in the east arcade there are twenty-four booth-spaces, a total of one hundred and eleven spaces. The lunches will be served in the east arcade.

The meeting room is at the extreme north end of the building with the main entrance at the south end, thus those entering to attend the meetings will pass through the main Exhibition Hall, but provision should be made whereby those passing in should not overlook the concerns exhibiting in the east and west arcades.

Just as a thought, would it be well in the morning when delegates are assembling at the convention and exhibition building, to, in some manner, turn them to the right and the left in order that they might pass the exhibits in the two arcades. Exhibits in the arcades will be less likely to be visited than the exhibits in the main hall which, because of location, will be sure to have the attention of delegates.

A barrier placed across the passage way from the main entrance into the main exhibition hall with large arrows pointing to the left and the right, this barrier to remain in place until after the morning session has been called to order, each morning, would ensure the giving of attention to the exhibits of those in the east and west arcades and would make those spaces thereby of equal value, let us say, with many of those on the main floor.

The foregoing thought is simply born of a knowledge that at various exhibitions held in conjunction with conventions in various fields certain exhibitors have been greatly disappointed because they have not at their booths received the attention that others have received, due largely to location. In our natural gas shows we know it is the desire of the management to have every man equally well served and every interest brought so to the fore as to prevent disappointment and criticism.

The "Wrinkles" of the Kansas City meeting promise a rare treat and yet all of those who are capable of producing "Wrinkles" helpful to the industry have not, as yet, turned in their quota. We, therefore, urge the men of the field, the men in gas company offices, the men in meter shops, the men who are fitters, etc., to go-to-it and turn in information regarding how they have found it possible to do things in ways easier and quicker than by usual methods.

The Association management purposes to entertain those who attend the convention, in a worthy manner, and all may be assured that the four days in May, starting with the middle of the month, May 15th, will be looked back upon as red letter days when the convention of 1922 shall have gone down into history.

Mr. L. B. Denning, the worthy President of the Association for this year, has it in mind to provide a type of papers and discussions that shall challenge those heretofore presented at conventions of the organization. Mr. Denning has his plans well laid, his program excellently lined up as told-of in last month's issue of THE GAS INDUSTRY, and his choice of speakers is, indeed an excellent one.

The thing for YOU to do is to turn up at Kansas City, register, attend the sessions, visit the exhibits, get acquainted, meet your old friends, and give as well as receive.

Don't think for a moment that any man is interested in your troubles—unless he is a lawyer.

Automobile Safety Lessons

Lesson Outline No. 12-B

STATISTICS, AUTOMOBILES AND AUTOMOBILE ACCIDENTS

In the United States, in 1919, there were approxi[illegible] [illegible]000 persons accidentally killed. Of this num[illegible] 22,000 were killed in industry. The remainder [illegible] were killed on the streets and in the homes. [illegible]000 persons were killed as the result of autom[illegible] accidents. This is the largest number that can be [illegible] to any one cause.

It can truly be said that the automobile is the most [illegible] peace time machine.

While in the industries, on the railroads and elec[illegible] ways, and in the mines, through organized safe[illegible] hazards are coming under control and accidental [illegible] are being reduced, the fatalities from automobile [illegible] are mounting by leaps and bounds.

Deaths caused by automobiles, per 1,000 popula[illegible] increased 20 fold (2,000 per cent) from 190[illegible]

[illegible] not more than one-fourth of the people [illegible] United States are exposed to industrial hazards [illegible] every one the moment he leaves his door [illegible] garage is exposed to the automobile hazard [illegible] streets.

Deaths from automobiles are increasing each year [illegible] increase in the number of automobiles.

[illegible] 1910 there were 400,000 automobiles operated [illegible] and approximately 2,000 people were [illegible] the result of automobile accidents.

[illegible] 1919 there were 7,500,000 automobiles and over [illegible] deaths. This is approximately one half the num[illegible] people who were killed in all of our industries [illegible] railroads in the same period of time.

Whether or not this death rate will continue to [illegible] depends largely upon the efforts put forth by [illegible] to prevent automobile accidents.

[illegible] OF CARELESS AND INCOMPETENT DRIVERS

[illegible] is coming when the law will require all [illegible] examinations proving that they are phy[illegible] and mentally fit and have sufficient knowledge to [illegible] safely. Part of this examination [illegible] just such subjects as the ones presented in [illegible] lessons.

Persons who should not be allowed to drive cars [illegible]

a) Children below a certain age.

b) Persons whose height does not permit easy reach of the controlling pedals.

c) Persons who have not sufficient strength to operate control levers easily and positively.

d) Persons under the influence of liquor.

e) Epileptics or others subject to fits or fainting spells.

f) Persons who do not know and understand the traffic laws, ordinary rules of the road, and other points concerned with safe and efficient automobile operation.

g) Persons with dangerously defective hearing or eyesight.

h) Cripples or persons minus arms or legs whose defects interfere with their safe control of an automobile.

12. Laws have not yet been passed covering all of these points, but we should bear these things in mind because they are essential for our own safety and the safety of others.

13. The demands for safety are more stringent than the demands of the law, and rightly so. Laws are primarily to insure justice. A full appreciation of safety saves lives and limbs no matter who is to blame.

(Complete sets of twelve copies of the "Safety Bulletins and Safety Lessons for Automobile Drivers" can be had at cost by addressing the National Safety Council [illegible] Michigan Ave., Chicago.

MAY BE CHARGED TO CONSUMERS

[illegible]

THE former New York Public Service Commission for the Second District [illegible] with the con[illegible] a rate fixing case where the [illegible] Light Co. [illegible] was the other party [illegible] equipment and maintenance [illegible] called [illegible] depreciation [illegible] the [illegible] of employees should [illegible] the employees even indirectly. The [illegible] [illegible] a proper [illegible] [illegible] a sense [illegible] employees and the part of [illegible] maintenance [illegible] purpose is a proper [illegible] capital.

NATURAL GAS STATISTICS

IT naturally requires a long period during which to gather statistics from the many sources that pertain in the natural gas field. Therefore, the Geological Survey, Department of the Interior, in supplying us with the following data have given us the latest information in their possession. This brings the facts up to 1919 as the figures represent items in 1917 and 1918.

Certain of the states have made vast changes in their natural gas records since 1918, for instance, Wyoming, and some of the other states showing many productive wells and extensive transportation facilities. However, the figures produced, though not of the current year, will prove most interesting.

In one of the accompanying tables a comparative statement is given between producing wells and dry wells drilled in 1918, also the shrinkage in productive wells from 1917 to 1918, although some of the wells at the close of 1918 show an increase over the same date in 1917. This same table indicates the abandoned wells. It might be efficacious to have the public and the utilities commissions observe the number of abandoned wells, the number of dry wells and other shrinkages shown, say nothing of the cost of marketing gas, in order that they might better comprehend why gas must bring a reasonable figure at the burner.

SUMMARY OF WELLS DRILLED

Wells Drilled for Natural Gas in 1918

State	Productive Dec. 31 1917	Drilled in 1918 Gas	Dry	Total	Abandoned in 1918	Productive Dec. 31, 1918
Alabama	24	4	4	8	5	23
Arkansas	113	6	....	6	9	110
California	111	18	3	21	18	111
Colorado	13	....	....	....	3	10
Illinois	287	11	21	32	44	254
Indiana	1,830	129	26	155	199	1,760
Iowa	7	2	....	2	1	8
Kansas	2,579	334	229	563	604	2,309
Kentucky	286	45	25	70	21	310
Louisiana	269	46	18	64	38	277
Maryland	.....	3	....	3	....	3
Michigan	9	7	....	7	1	15
Missouri	47	....	....	....	7	40
Montana	15	2	2	4	4	13
New York	2,078	82	13	95	62	2,098
North Dakota	7	..	....	....	....	7
Ohio	5,979	614	297	911	425	6,168
Oklahoma	1,433	461	340	801	296	1,598
Oregon	4	....	....	....	1	3
Pennsylvania	14,534	1,276	258	1,534	566	15,244
South Dakota	30	4	....	4	5	29
Tennessee	12	4	8	12	2	14
Texas	250	27	86	113	46	231
Utah	.....	1	....	1	....	1
Washington	2	2	....	2	....	4
W. Virginia	9,329	718	170	888	360	9,687
Wyoming	35	12	8	20	5	42
	39,283	3,808	1,508	5,316	2,722	40,369

DISTRIBUTION OF NATURAL GAS CONSUMED IN THE UNITED STATES IN 1918

State	Consumers: Number of Productive	Consumers: Domestic	Consumers: Industrial	Gas Consumed: Domestic Volume (M. Cu. Ft.)	Domestic Avg. Price (Cents) Per M. Cu. Ft.	Domestic Value	Industrial Volume (M. Cu. Ft.)	Industrial Avg. Price (Cents) Per M. Cu. Ft.	Industrial Value	Total Volume (M. Cu. Ft.)	Total Avg. Price (Cents) Per M. Cu. Ft.	Total Value
Ohio	2,359	885,876	4,010	98,023,666	32.36	$31,721,005	45,561,594	26.27	$11,973,156	143,585,260	30.43	$43,694,161
Pennsylvania	1,509	481,275	4,486	59,839,730	31.37	18,772,970	117,300,074	22.16	26,004,250	177,139,804	25.27	44,777,220
New York	342	169,308	641	19,637,845	33.60	6,599,907	703,362	25.49	179,300	20,341,207	33.32	6,779,207
Kansas	412	120,350	877	14,808,432	29.97	4,439,202	19,103,851	13.74	2,625,016	33,912,283	20.83	7,064,218
W. Virginia	407	127,168	1,873	20,968,624	21.02	4,409,125	87,704,820	8.97	7,875,664	108,673,444	11.30	12,284,789
Oklahoma	398	120,507	1,480	21,493,267	20.37	4,379,661	85,168,137	9.79	8,344,703	106,661,404	11.92	12,724,364
California	95	260,767	894	5,901,797	66.78	3,941,560	33,817,144	11.85	4,010,106	39,718,941	20.01	7,951,666
Texas	81	79,865	793	7,212,092	38.75	2,795,265	13,070,621	20.83	2,723,197	20,282,713	27.20	5,518,462
Kentucky	122	90,849	100	7,922,941	30.98	2,454,936	4,277,248	14.92	638,457	12,200,190	25.35	3,093,393
Missouri	34	84,038	186	4,054,772	54.80	2,222,346	456,449	29.83	136,198	4,511,221	52.28	2,358,544
Arkansas	12	21,742	226	3,551,314	31.10	1,104,529	8,677,974	9.98	866,571	12,229,288	16.11	1,971,100
Indiana	931	31,032	284	2,428,003	37.48	910,215	2,088,580	28.73	600,189	4,516,583	33.44	1,510,404
Louisiana	73	24,370	578	4,264,777	20.41	870,587	22,059,373	7.82	1,726,448	26,324,150	9.86	2,397,035
Illinois	186	8,669	90	596,758	40.38	241,024	3,876,260	9.80	379,925	4,473,018	13.88	620,949
Montana	6	1,198	1	176,727	35.10	62,048	312	32.05	100	177,039	35.10	62,148
Wyoming	25	999	46	189,010	32.34	61,128	4,149,830	2.29	95,043	4,338,840	3.59	156,171
South Dakota	31	391	2	20,166	67.46	13,604	22,020	25.00	5,505	42,186	45.29	19,189
Alabama	9	102	1	2,600	41.92	1,090	2,000	40.00	800	4,600	41.08	1,890
Tennessee	11	6	6	1,442	52.01	750	1,825,283	19.74	360,390	1,826,725	19.76	361,140
Michigan	19	12	2	745	100.00	745	428	70.09	300	1,173	89.09	1,045
Colorado	17	6	3	2,553	28.39	725	7,550	24.50	1,850	10,103	25.48	2,575
Oregon	3	3	....	2,200	25.00	550	.....	....	.....	2,200	25.00	550
North Dakota	7	6	....	913	52.02	475	.....	....	.....	913	52.02	47
Iowa	7	3	....	1,758	13.93	245	.....	....	.....	1,758	13.93	24
Maryland, Utah, Washington	5	1	2	166	30.12	50	25,750	10.29	2,650	25,916	10.41	2,71
Total	7,101	2,508,543	16,581	271,102,298	31.35	$85,003,742	449,898,661	15.23	$68,549,818	721,000,959	21.29	$153,553,5[illegible]

Our patience will achieve more than our force.—Burke.

Gasoline From Oil Shale

Presented Before the Engineering Society of Buffalo

By DR RALPH H McKEE,

Professor of Chemical Engineering, Columbia University

THE fact that when Drake drilled his first well in Pennsylvania, oil sold for $1 00 per gallon, and that before his first winter was over, oil was selling for $1 00 per barrel, does not, according to Dr McKee, overshadow the fact that from 1910 to 1912 the consumption of gasoline equalled that of the production and from that time on the production has been losing out and the price is mounting

Dr McKee, believing that these are the conditions, and believing that all of the oil fields in the United States have been discovered, and that a fairly accurate account has been taken of the oil remaining in those fields, and believing furthermore that only 60 per cent of the oil now underground is recoverable, has sought that which to him would appear to be the only possible way out of the coming gasoline shortage, namely, production from oil shale

In 1920 gasoline production is quoted as being 4,800,000,000 gallons, 10 per cent of which is said to be casing-head gasoline, and 15 per cent cracked However, due to the conditions as stated by Dr McKee that this casing-head gasoline is mixed with lower grade gasoline for the sake of a better balance, this 10 per cent really amounts to approximately 25 per cent of the total gasoline produced With the lessening of natural gas this 25 per cent as a unit, aside from our oil resources, so says Dr McKee, is in danger of being snuffed out

The Doctor stated that the United States is now at the peak of its oil production, and that in about three years the curve on the chart will start downward

The supply now in the ground, Dr McKee estimates, at the present consumption, will last for twenty two years However, as only 60 per cent can be taken from the earth, this leaves us in fact only 13 years' supply in the ground

Relating to the position of the gasoline producer, Dr McKee illustrated his point with the story of a child making up a fairy tale, the child picturing a rabbit being hunted by a hound After various and sundry jumps and cross country difficulties with the hound always gaining the child wound up by having the rabbit climb a tree At this point, however, the story was stopped by the father who attempted to explain that a rabbit could not climb a tree "But", said the child, "it's got to" The gasoline man is in exactly the same position as the rabbit, production is necessary, it can't be done, but it's got to, said the Doctor

The text of Doctor McKee's written address was as follows

Gasoline briefly may be defined as a hydro-carbon distillate, usually of petroleum, 90 per cent of which boils below 374 degrees F, and all of which boils below 437 degrees F It has a density of less than 50 degrees Be To be a commercial product it must be of slight color and free from certain types of impurities

Before considering oil shale as a source of gasoline I want to touch upon the technology of petroleum-gasoline production Twenty years ago all the gasoline used was obtained from the crude, low-boiling distillate of petroleum This distillate was treated with concentrated sulphuric acid to remove coloring matter, ill smelling compounds, certain substances commonly called unsaturated compounds and small amounts of certain basic constituents Following the acid wash was treatment with caustic soda solution, whereupon the treated crude distillate was re-distilled and a very fine quality of product was obtained

Pennsylvania petroleum is the highest quality American petroleum and yields readily high-quality gasoline but with decreased output and the influx of lower-grade oils from Ohio, Canada, Mid-Continent and the West, it was found that they did not yield in quantity and quality the gasoline yielded by Pennsylvania crude Meanwhile demand for gasoline, due to the wide use of the internal combustion engine, was increasing accordingly lower grade gasolines began to come in the market They carried some of the higher boiling kerosene fractions, some color and some of the unsaturated compounds which give a strongly colored product With lowered standards came increase in the quantity available but even under these circumstances demand has increased faster than the supply Kerosene has been had to other products to supply the deficiency with the result that three new petroleum products viz casinghead gasoline natural gas condensate and "cracked" gasoline as well as substitutes of quite different origin have arisen

Cracked Gasoline When a higher boiling petroleum of the type of low grade fuel oil or gas oil is heated to a temperature around 700 degrees F decomposition ensues with the separation of carbon and the

Originality is the one thing which unoriginal minds cannot feel the use of.—Mill.

formation of light-boiling constituents of the type of gasoline and kerosene. This process is called "cracking" and the lower-boiling of the commercial products thus made is known as "cracked" gasoline. Cracked gasoline carries up to 40 per cent. of unsaturated compounds. Formerly a gasoline carrying as much as 5 per cent. of unsaturated constituents was not desirable for us in an explosive engine. Today much of the gasoline sold is a mixture of cracked gasoline of 40 per cent, unsaturated content. In New York it is not uncommon to have put in one's car a gasoline carrying 20 per cent. of unsaturated constituents, which means that such gasoline on standing and in contact with air discolors and separates, after a time, a small amount of brown tar-like deposit. The automobile of a few years ago would not run on present-day gasoline. With the certain increase in the content of unsaturated compounds, we must look to the engine designer to keep up with the changes in the type of fuel available.*

The cracking process most largely used is that devised by Dr. William M. Burton, a chemist now president of the Standard Oil Co. of Indiana and the recipient, January 13, of the Perkin Medal, awarded by the American Section of the Society of Chemical Industry for notable attainments in the industrial applications of chemistry. The Burton process is used by Standard Oil Companies and licensees with an approximate daily yield of two million gallons of gasoline.

Burton starts, as do all cracking processes, with a cheap petroleum residuum, preferably of the Pennsylvania mid-continent types. The distinctive feature of his process is that he heats under a pressure of 75 pounds and does not relieve the pressure until after the vapors have passed through the condensor. The oil is heated by direct fire in a steel still tank at a temperature varying during the process but which averages about 700 degrees F. Any cracking process is handicapped by the deposition of coke on the bottom and sides of the still, the Burton process suffering severely in this respect. The original patent claims that the product is free from unsaturated compounds. However, the product as at present made does not carry a considerable percentage of unsaturated constituents. The process is fairly cheap to operate but suffers as stated from heavy flinty carbon deposits, high deterioration of stills, danger to operators, and also because of products formed which are too unsaturated to be of the highest grade.

Rittman and McAfee

Other workers have attempted to get away from the troubles of the Burton process, particularly the heavy carbon separation and unsaturated character of the product. Rittmn while a graduate student at Columbia University developed a process by which the cracking is effected in the vapor phase instead of as a liquid. His apparatus consists of externally heated vertical 10 in. or 12 in. pipes through which the vapors are passed under pressures which may be as high as 300 pounds and at a temperature of 700 degrees F. By reason of the reaction being in the gaseous phase instead of the liquid, the amount of carbon deposited is small but the products, like those of Burton, are partially unsaturated.

Dr. McAfee, like Dr. Rittman, a Columbia graduate, by a process which has been carried out commercially, avoids the use of pressure and obtains a sweet-smelling, strictly saturated gasoline by a chemical reaction of quite different type from that of Burton or Rittman. He works at ordinary pressure at a quite moderate temperature, say 500 degrees F., heating the oil to be cracked with a few per cent. of its weight of aluminum chloride. Aluminum chloride reacts with the oil to form a coke-like carbon and low-boiling hydrocarbons suitable for motor fuel. The uneconomic recovery of the aluminum chloride for re-use has been a commercial handicap, the selling price of gasoline not being high enough to permit discarding the chemical after one use.

Casinghead Gasoline

Many oil wells yield at the same time considerable gas as well as oil. This gas is formed in part by the evaporation of the same volatile constituents as are present in petroleum, and which on compression yield low-boiling liquids of naturally high volatility. Gasoline thus obtained from the gas issuing from the casing of an oil well is called "casinghead" gasoline. Its volatility is so high and its density so low that it can be mixed with higher boiling constituents such as kerosene and the resulting product appears to be a gasoline of the ordinary type.

Casinghead gas may be bubbled through a high-boiling distillate such as "gas oil" and the resulting solution of gas in the oil distilled whereby the gasoline is recovered and the aborbent oil is available for re-use. Recovery of gasoline from natural gas also may be effected by the use of chrcoal as by Burrell's process* or by the use of silica gel which promises to displace gas oil and Burrell's carbon for this purpose.

Alcohol Blends

In America we have had gasoline cheap and in comparative abundance; this has not been the case the world over. We consider 40 cents a gallon high, but most of the world would welcome gasoline at 60 cents and call it cheap. Europe uses large amounts of benzol, a by-product of coke and gas plants. The "black strap" molasses of raw sugar refining yields on fermentation alcohol which is used in Cuba extensively as a substitute for gasoline. Natal of South Africa has an abundant supply of alcohol from the same source. High price of gasoline in that part of the world has made possible a commercial product called "natalite" which is a mixture of alcohol with about 45 per cent of ether. In America there has been but one commercial attempt to supply a gasoline

*Adapted from Dr. McKee's address on "Gasoline from Oil Shale," delivered before the Franklin Institute, Philadelphia, Pa., on January 12, and soon to be presented in full in the *Journal of the Franklin Institute.*

*"The Charcoal Method of Gasoline Recovery," by G. A. Burrell G. G. Oberfell and C. L. Voress. *Chemical Age*, Sept., 1920.

When a man looks into a mirror he imagines that he sees the reflection of a hero.

substitute, viz., alcogas. These substitutes have their respective advantages and disadvantages.

In Europe benzol is decidedly cheaper than gasoline, but it is harder to start the engine and carbon deposition in the cylinder is greater than with gasoline. The shale motor spirit of Scotland often runs 60 per cent of unsaturated constituents and accordingly is strongly odored, somewhat discolered and cannot be stored for any considerable time without loss of quality. The alcohol blends of Cuba and Natal, particularly that of Natal which contains ether, give trouble owing to their great tendency to make the engine "knock," and also some trouble due to the difficulty of obtaining them free from acetic acid with its corrosive action on containers. Addition of aniline will reduce and even remove this trouble but its price, $1.50-$2.00 per gallon, militates against its use.

The alcogas is a more complex material than the substitutes used in other countries, consisting approximately of one-third benzol distillate (principally benzol and totuol), one-third alcohol products, alcohol and ether and one-third petroleum distillate, principally gasoline. The amount of ether required to easily start the engine varies with the season—in winter 10 per cent. and in summer 5 per cent. The great advantage of this substitute over gasoline is freedom from carbonization in the cylinders, which means ordinarily a greater mileage per gallon than with gasoline, viz., 11 per cent. On the other hand the price of the product has been kept above that of gasoline, a handicap arising from variation from time to time in the supply and price of each of the three ingredients.

Future Automatic Fuel Supplies

Prospect of increased supply of petroleum from American wells is nil. The U. S. Geological Survey and the U S. Bureau of Mines not only show that production approximately is at its peak and that within a few years, probably within three years, output of wells in the United Sttes will begin to decline, but that we should not expect to find any new petroleum fields in the United States. In the past, as at present, the United States furnished approximately two-thirds of the world's production, but we are consuming more than we are producing. In 1919 we imported from Mexico 53 million barrels, in 1920 106 million barrels and in 1921, slightly more than in 1920, amounting annually to about 60 per cent of the total Mexican production of petroleum. Furthermore, the Mexican and Texas fields are of the short-lived type and already in some places are yielding salt water instead of petroleum.

Utilization of Oil Shale—Research of Columbia University

Four years ago a careful canvass showed that relatively little was known about the fundamental factors essential to a successful shale oil industry. For example, almost nothing was known regarding the heat of reaction by which oil is formed from the organic material of the shale; likewise as to specific heats and latent heats, or of the chemical reactions that control its formation. In the thought that shale utilization eventually would become an important industry and that knowledge of these fundamental factors were essential to its proper development, we undertook their study at Columbia University. Since that time I have had four graduate students working on various parts of these problems, which work, while far from complete, has yielded results of the utmost importance. Methods used and data obtained I have not time to discuss; I can give only the results.

One of the most important factors entering into the design of a proper shale retort is knowledge of the amount of heat absorbed or evolved in the formation of oil from the organic matter of the shale. One of our men devised the first apparatus capable of determining directly this factor, and found that heat was absorbed in the process and that the amount of heat absorbed was nearly the same for shales from different sections, amounting in general to about 450 calories per gram of oil and gas produced, or 160 B. t. u. per pound of average shale retorted.

It has been thought generally that the organic matter in shale decomposed on heating to form the oil as the primary products of decomposition. Researches in our Chemical Engineering Department show that this is not the case, but that the primary decomposition product is a heavy, solid or semi-solid bitumen and that the oil is formed by a secondary cracking process from this semi-solid bitumen. This cracking process is in the liquid phase similar to that of the Burton process. Further it was found that the decomposition temperature of the shale was quite definite, with 400 degrees and 410 degrees C. as its limits.

The investigations also have shown to be incorrect the belief which has been held by many working on the development of shale oil manufacturing processes, viz., that on heating, gasoline is the first product formed; then on higher heating, kerosene; and on still higher heating, lubricating oils, etc. In other words, it was shown that what happens on heating oil shale is that all these products are formed simultaneously by the cracking of the semi-solid bitumen formed first.

Characteristics and Yields of Oil Shales

Oil shales vary not only in yield of oil per ton of shale, but also in type of oil, type and character of minor constituents and also even in the gangue which carries the organic portion. In Scotland are worked shales which yield but 20-22 gallons of oil per ton of shale mined. Large deposits of shales in this country give a much higher yield; the largest of these are the Green River shales of Colorado, Utah and Wyoming. There also are large deposits in Nevada, California, Kentucky, Indiana, Ohio, New Brunswick and Nova Scotia, and smaller deposits, though large enough for commercial exploitation, in many other portions of

His satanic majesty smiles every time he sees a stingy man.

this continent. There are similar deposits in other parts of the world.

Of those deposits which are likely to be exploited in the next decade, we have variations in yield from 20 gallons to 60 or even 80 gallons per ton. The large deposits of better grade will give about a barrel (42 gallons) of oil per ton of rock. The character of oil produced in some cases is apparently a straight asphalt-type petroleum similar to California well-petroleum. Other shales give a large quantity of paraffin wax of even better quality than that given by the best oil wells of Pennsylvania's history. In the opinion of the writer the average petroleum to be made from American oil shale will resemble most closely the petroleum obtained from the present mid-continent field, such as the Oklahoma oil.

It is not commonly appreciated how large these oil shale deposits are. If we consider only those oil shales which will furnish a barrel (42 gallons) or better of petroleum per ton of shale we have in the Green River section alone in known deposits sufficient to furnish 64 thousand million barrels of petroleum. which amount is eight times larger than the total of the well-petroleum that this country has produced since Col. Drake drilled the first oil well in 1859 at Titusville, Pa. It is more than five times the total production of the world since well-petroleum became commercial sixty years ago.

Cracking Crude Shale Oil

If we are to have gasoline in quantity from oil shale, we must make the crude shale oil and then crack it by some one of the oil-cracking processes. If the Burton process is used, the gasoline so made will not be one of high quality. It will be strongly odored, will color on standing, and will be inclined to carbonize in the cylnder. However, its heat value per gallon will be greater and accordingly in a properly designed motor it should give a slighly higher mileage than old-fashioned gasoline.

On the other hand, if we used the McAfee process of cracking, we would get stable, water-white, well-keeping, pleasant-odored gasoline of the old type. However, it is to be remembered that the McAfee process is a more expensive type of oil-cracking. At present in Scotland they are using the ordinary scheme of cracking in which considerable quantities of unsaturated compounds are formed, as high as 60 per cent. This motor spirit is generally used and is not considered by the public in that country to be of lower grade than gasoline from well-petroleum.

In distilling most oil shales there is formed simultaneously considerable quantities of ammonia from the nitrogen constituents of oil shale. This ammonia is usually absorbed in sulphuric acid, recovered and sold in the form of ammonium sulphate for fertilizer uses.

A shale oil plant, then, to be successful must be able to handle cheaply and efficiently large quantities of oil shale, distilling it to get the crude oil and ammonia and then crack and refine the crude oil to get a commercial motor spirit. The Scottish plants do this, excepting that they devote considerable attention to the recovery of paraffin wax, and it is only the oil left after the wax recovery that is distilled to give lubricating oils, gasoline and burning oils, or is cracked to give shale gasoline.

The Scottish shale retort is one of the vertical-pipe type. When we attempt to handle American oil shales in this retort we find that it gives trouble owing to the pieces of shale caking and adhering to the sides of the retort. This caking of the shale lumps stops the passage of the shale through the retort. For use on most American shales it is quite apparent that we must either modify this Scottish retort or devise retorts on new lines. The Scottish retort is designed with the dual purpose of recovering ammonia from the shale and obtaining oil. With the American shales we have larger amounts of oil, but ordinarily distinctly less ammonia than is produced from the Scottish shale. Therefore, the retort to handle the American oil shale properly must be designed primarily for the production of oil in quantity and of acceptable quality, and only secondarily for the production of ammonia.

There are more than a score of retorting schemes which have been proposed by various American inventors. None of these yet have produced shale oil in large quantities. The most completely developed plant and process are those of the Catlin Shale Products Co., at Elko, Nevada. It has a plant which has produced approximately 100,000 gallons of shale oil. They have a small commercial refinery almost completed and it is probable that the first shale oil and shale gasoline to be marketed in quantity in America will come from this plant. There are several other types of retorts which have been proposed for use in distilling oil shale which probably would, if given proper technical study and trials, develop into commercial processes. At present few believe that any one of these retorts is certain to be practicable when used on a large scale. The ideal process will be one permitting continuous operations on a large scale with minimum labor and with the recovery of good yields of commercially utilizable products.

It is only within the last five years that serious attention has been given to the question of the development of a proper type of retorting still. We have no reason to think but that well before the same length of time now will have elapsed we will have succeeded in obtaining a retorting scheme which can handle with low labor costs efficiently and economically American oil shales.

It is not commonly appreciated with how few men a chemical manufacturing plant can be run. Generally speaking, in such processes labor is a minor factor, but in connection with most of the retorting processes yet proposed labor and power requirement

To do what is impossible for talent is the mark of genius. Amiel.

ge and will be approximately one man per
per diem of refined product, if mining as well
rting and refining are included This is the
labor requirement, but we must reduce the
requirement if we are to have in America a
successful shale oil industry
e shown you that the demands for petroleum
reasing in this country at the rate of about
ion barrels a year If this continues, it will
each year seventy five new plants, each handl
0 tons of oil shale a day and representing an
ent of close to a million dollars each to give
it oil to meet simply this yearly increase in
is for petroleum We have no other source of
or gasoline substitute in prospect which prom-
furnish even a minor part of this demand In
words we have reason to look forward to the
on of oil shale as a very profitable chemical
cturing industry which will rank with our
industries in its labor and capital requirements
value of output"

KEEPING IN TOUCH

HE State College at Ithaca, N Y, reports that
the best and most successful farmers now-
adays subscribe to farm journals, which they,
in large measure read during the winter time
mings, thereby to keep in touch with that which
ters gather and bring to them in their maga-
zines They learn thus of what other farmers
ought to light touching upon the various prob-
the farm greatly benefiting accordingly
e take a lesson from this bit of recent informa
ought to our attention, and note the point at

trade paper is a most valuable help It aims
at the needs of the readers of its field and
f the industry who make it a point to read
ls the many valuable suggestions the succes
mbers bring them are indeed large gainers
ngs a large percentage of readers in the gas
f the United States and commend these many
r farsightedness yet those who are not as yet
ERS OF EVERY ISSUE are not subscribers
own names at their own addresses and those
ad but now and again a copy of some fellow
a subscriber you are missing much that would
value to you Become a subscriber yourself
ers issue, you will agree that $2(0 spent t
be for a year is two dollars well invested
ider it is less than three fifths of a cent a day
s than four cents a week while every number
of interesting valuable and helpful articles
and suggestions
t is you will wonder after receiving the GAS
STRY magazine regularly why you had not
bed before Send $2(0 and become a sub
You will best enjoy YOUR OWN copies

EACH ONE IS THE COMPANY

IN a recent address by Joseph H Crane of Boston, he made the following statement regarding that which is so frequently lost sight of, namely, "It's true that each one of you is the company when you are talking to a customer"

The public feels it to be the case that when talking with an employee it is actually talking directly with the company and owing to this condition it is most important that employees should be selected not at random, not regardlessly, but with regard to their fitness reliability, tendency to speak facts rather than to exaggerate, and inclination to render true service rather than to superficially gloss over a condition, in order to accomplish temporary relief from, for instance, complaint, if it be complaint that is brought to the employee's notice.

We do not advocate the taking of responsibilities upon the shoulders where employees are not perfectly certain that such will be in accord with the ideas and desires of the chief We do, however, advocate the assuming of responsibilities where the individual is certain of his ground and that even an error will not implicate the institution

Employees of gas companies should be instructed and guided, not in the art of evading an issue as has not infrequently been the case in the field but of meeting an issue fairly and squarely, and with all frankness asking if not mind clear regarding a question, that the matter be referred to the chief in whose hands are the policies and the guidance of the company

Be frank be honest tell facts don't exaggerate Refer, if necessary, but don't leave the impression that there is any underhanded reason why you cannot make answer

The meter reader, the fitter, the commercial man the collector, in fact every employee of the gas company should be instructed not in words but in real conditions "cards on the table face up" that he in turn may so frankly and honestly meet criticism and question thereby to create that most valuable asset confidence on the part of the public

LEASED PUBLIC UTILITY

Status of Such Property When Leased to Private Company by Municipality

[illegible]

THE Illinois Public Service Commission which has [illegible] over rates for water service furnished by a municipal plant has determined that a public utility leased by a municipality to a private company is more the less municipally owned and therefore not under the commission's jurisdiction

A mind without occupation is like a cat without a ball of yarn.—Duffield.

Foreman Training Classes

An Important Phase of Government Work in Gas Appliance Field

By THOMAS E. JONES
Instructor of Foremanship, Cleveland Public Schools
Especially Prepared for the "Gas Industry Magazines"

FOREMAN Training Classes at the Reliable Stove Company of Cleveland, Ohio, are being conducted under the auspices of the Smith-Hughes Federal Law for the promotion of vocational education. The officials of this company were among the first in Northern Ohio to take advantage of the provisions of this measure. The classes are now in their second year. In order to determine their value, one must of necessity ponder long over the aim of the course. It must also be remembered that the students are the newest in any field of educational endeavor.

First and foremost, the aim of the course is to make men think. We are told that higher executives are paid for thinking. We believe such to be the case. However, executive ability fails to function very often because "some-one" in the organization did not think along parallel lines. Foreman-training aims to develop the type of co-operative thinking so much needed in business administration. When the foreman sees the perspective of the job, he readily sees that a healthy amount of straight thinking is necessary to hold it.

When men of red blood see a big job entrusted to their care, they become modestly proud and interested. The stimulation of this pride and interest is also a specific aim of the Foreman Training course. Generally speaking, interest in the means of a livelihood diminished with the passing of the craftsman. Seeing himself as a member of the business organization, with personal responsibilities and obligations to other members the foreman's job looms large before him. To intelligently direct the forces of industry, the foreman must see, feel, and above all believe that his job spells responsibility.

The foreman and executives of the Reliable Stove Company have co-operated in every way possible towards the realization of the foregoing aim. Two classes are conducted in the factory every week, one for executives and one for foremen. The executives' class is made up of the General Manager, Assistant Manager, Superintendent and staff, Purchasing Agent, Accountant and Employment Manager. The foremen's class is composed of the heads of the various factory departments.

Realizing that the foreman is the man between the management and the worker, and that industrial "indigesion" is due to a lack of understanding between these two parties, problems in human relations form the major part of class discussions. The job of being a production foreman is viewed from three angles: organizing, supervising and "housekeeping". These three viewpoints suggest certain problems that test the managerial skill of the foreman. Discussed in the light of the principles of psychology the foreman is better equipped to prevent their recurrence.

If any material factors affect the smooth running of a department, the same are noted and made the basis of discussion in the executives' class. In this class it is understood that all the members are good sports. Practical problems "come up" from the foremen's class and their solution is demanded of the executive. The "buck" resteth in this class "at the feet" (or on the head) of some executive. He sees that it is better far to remove the cause than to pass it on to some unsuspecting "brother".

The position of the instructor of these two classes may seem embarrassing at first, but such is not the case. It is rather interesting, if not fascinating. The instructor is not in the employ of the company. His attitude is one of strict neutraliy. Standing on a foundation made up of certain fundamentals, he sees the straight and narrow way along which he must proceed. A slight turn to the left or the right would undoubtedly mar the success of the undertaking. The General Manager of the Reliable Stove Company regards the instructor as a "cobweb sweeper"; the Assistant Manager labels him as a "disturber of the peace". The other members have not expressed themselves. However the reader will deduct that the major function of these classes is to reveal things as they are and direct the ability of all interested to bring about a remedy—if a remedy is needed.

As to results, would that they could be measured! There are evidences of heartier co-operation between the department heads and executives. Material factors such as stock delivery, storeroom organization, department records, tool room, service and overhead expense are regarded by every member of the Reliable family as practical elements in the interpretation of the "mystic" word co-operate. The "ground" at the Reliable Stove Company's factory was fertile long before the introduction of the course.

They have an employees representative plan that is workable and above all acceptable. It has stood a severe test. Regarding the foreman as the latest acquisition to student ranks, and realizing that his preparation has been neglected of some years, one must be tolerant in measuring the results.

Impress upon your foremen that it is necessary for them to think; convince them that they are a part of your business organization, and you, Mr. Executive, will get reward, the scope of which will exceed your expectations. There is every reason to believe that these hopes will be realized at the Reliable Stove Company Division of the American Stove Company. The atmosphere is healthy.

A man's duty, according to his own ideas, is not in accord with his neighbor's.

The Dollars and Sense of It

Human Relationship Problem a Most Important Factor in the Industrial Development of America

By JOSEPH B. GROCE

At the annual convention of the New England Association of Gas Engineers, the following very excellent suggestions were offered by Mr. Groce. In our last issue we referred to this address, quoting a few remarks from it, but herewith we give our readers the text in more complete form.

Mr. Groce centering attention upon that element which is of so great importance, namely, "Human relationship"; his remarks were as follows.—*Editor's Note.*

REFERRING to that important element in business, "Human relationship," let me illustrate what I mean by relating one or two stories.

When the present Erie canal was being built, Secretary of State Hughes was Governor of New York. He found, on looking over the plans of the canal that adequate arrangements had been made to take care of the mules that towed the canal boats, but there were no rest places for the human beings who ran these boats.

A certain business I know had a man in its employ for over ten years, doing laborer's work and driving a tip-cart. Someone asked the old fellow one day how he liked the company he was working for, and how they treated him. His reply was, "I was sick the other day, and so was the horse. They sent for a veterinary surgeon for the horse, but they sent me home and docked my pay for the time I was out."

Old Commodore Vanderbilt was the fellow who said years ago, "The Public be damned," but the New York Central Railroad today is one of the leaders in public advertising for the good-will of this same public.

You will agree with me, I think, that times are changing. The American people have always been an independent thinking people, and since the great war, they are more so. Some of you men here today were over across, during the war. Since you have come back home you are different fellows. The small and petty things of life do not interest you. It's the big, frank, open, face-to-face, and eye-to-eye things that really count. Cards on the table, face-up, a spade a spade—that's the way you want people to treat you, that's the way you want to live.

That's the spirit that has been developing in the industrial world, slowly but surely, for some years now. Capital and labor—employer and employee—man and management. How are they best getting on? By laying their cards on the table and talking over their common problems, man-to-man, in the open.

In my judgment, this development, this human relationship problem, is the most important factor in the industrial development of America today. And the big industries that are meeting this problem in the open, are the industries that are most successful. Had I the time, I could prove this to you by scores of actual cases.

You and I represent a big industry—the Public Service Industry. It is one of the biggest in this country. This industry as an industry, has many problems, but it has two problems bigger than any other.

The first—*human relationship with its employees*—it is handling better than most other industries. After considerable study of this problem, not only in New England but throughout the Middle West, I am convinced that the telephone companies, the electric light companies, and the gas companies are doing more to help their men and women help themselves; have always had a greater regard for their, old faithful employees, than any other industry I know. If Mr. Barnum were here, I should like to tell him the attitude of the Boston Consolidated Gas Company toward its faithful, old employees is one of the finest things in the industrial life of Boston today.

But the other big problem—*human relationship between the Public Utilities and the Public*—or, the problem of *Public Relations,* I regret to say I think you have handled badly. Perhaps it would be better to say you have not, up to recently, been handling it at all.

You are gas men and have been making gas, and selling gas. How much real effort to get the good-will of the public, whom you serve, has your company made in the past ten years? Your companies have been attacked on every side, by blatant politicians and scurrilous newspapers, and yet they have remained silent. You've been called rascals and thieves by ignorant and unthinking people, whenever you've asked for higher rates, and yet little has been done to stop this hue and cry.

Mind you, some of it never can be stopped. But, I think you agreed with me when I said, a little while ago, that the American people have always been independent thinking people, and I hope you will go further with me and agree that, on the whole, they are a fair-minded people. Leading representatives of the Public Utilities of New England have come to this conclusion, and in order to help educate these fair-minded people

The man who fears nothing is as powerful as he who is feared by everybody.—Schiller.

better understanding of their Public Utilities fo r all is said and done, they are *theirs* have estab d the New England Bureau of Public Service Inter- ion which I represent here today

ut the work we of the Bureau are trying to do is a small part in the solution of the problem Men ow in the field are closer to the firing line It is that through our Weekly Bulletin we are getting a volume of reading matter into the papers of New land giving reliable facts in regard to the Public ities and in this way are helping to educate the Pub a better and fairer understanding of the Public ice Industry

ut you in your personal contact with customers ratively in your day's travels from home to home supplement this work of ours and make it the ning of better times for the Public Utility Industry

ot I know that every one of you *are the* company you are talking to a customer The attitude of organization toward the Public is gauged by your per- l attitude toward the customer This may seem a matter but it was not so many years ago when head of the concern used to personally see every cus er

ot so much need as *truth* that we need to tell the about our industry Let's tell him a good pro ne of his savings are invested in Public Utilities and when he knocks the Public Utilities he strings his own pocketbook Let's tell him that his ne his hamlet his home would be a pretty place to live in without the telephone light power heat and transportation by electric cars to and from ork It's the truth then why not tell him these gs Let's ask him how he liked candles and lan s recently after the ice storm and then follow that by asking him where he expects the money to come r repair the millions of dollars worth of damag the Public Utilities by that storm Let's help ow a human relationship between our industry and Public so that gradually there will develop in the ic mind a realization that these Public Utilities this electrical industry is something to be proud of and not nothing to sneer at

he American Public should be made to realize that Public Utility industry of this great country of s one of the finest things we have It has done to that any other industry to make us rich in ma al wealth and happy and contented in our home life

We do not talk about these things And talk ment and Necessity We are admitted Slaves we the American Public to independent thinking and bled Then gradually these truths are going to the mind of the Public and of attitude is even to go to change

This is my idea I think it is that has been laid out for us by the New England Bureau of Public Service Information It is along these lines that you can all help in this work

The other day John B Bogert died one of the most noted newspaper editors this country has ever had for 17 years in the New York Sun with Charles A Dana Bogert was the originator of that oft quoted remark, "When a dog bites a man that is not news It happens so often But when a man bites a dog, that is news

This, for years has been the attitude of most of the newspapers in regard to the public utilities When a gas plant blew up people were aghast at gas that was news and they printed only that kind of stories about us But the newspapers today, with a fixed pub lic policy are realizing that the Public Service Com panies are run by red blooded human beings, with brains and vision and are seeing that the prosperity of the whole country is more dependent upon the fostering of our Public Utilities than upon any other single factor

If this were not so the letter which I am going to read to you under date of November 4 1921 could never have been written This letter was written by Stanley W Bogert Managing Editor of the Business Section of the Philadelphia Public Ledger one of the most influential newspapers in this country

November 4, 1921

Mr James M Bennett
United Gas Improvement Company
Philadelphia Pa

Since I learned that you were to meet with the gas industry representatives at Chicago I have felt that you could do something toward giving out some of the news of the utility companies which is of interest to business men, readers and the general public as well

What you have done here in frankly and freely supplying us with news is an illustration of the point in mind and demonstrated that the public utility companies the newspapers and the public are benefited from a free discussion of these matters

It used to be that some of the officers of those who represented them actually would have nothing to do with the newspapers of the past There is a new basis of news relations in many instances however You have been a part of this new order just as the Illinois Committee on Public Information and the other public utility information bureaus

The thing that strikes me is the shamefaced manner the new order of things regards the old ways and ways there are reasons why public news matters propaganda that you have been doing in supplying news requests and matters which in the past would have been [illegible] in just a fair way of doing things

There is a [illegible] The utilities certainly are [illegible] the public and can do no harm to keep the public advised of their progress

their needs, etc. It would be fine if this news could be put out more generally on the real news basis which you are following.

Very truly yours,

BUSINESS SECTION, PUBLIC LEDGER,
(Signed) Stanley W. Bogert,
Managing Editor.

Let's all of us, then, get together in this work of education, with heads up, and a proud step—cards on the table, face up—calling a spade a spade, but giving as good as is sent, for in our hearts we know we're working for the greatest industry in America today, and we furthermore know, sooner or later, the American Public are going to realize and appreciate our worth. The time has not yet come, thank God, when we cannot trust the American people—if they are told the truth.

GROUP LIFE INSURANCE

THE San Diego Consolidated Gas & Electric Company conducts a group life insurance benefit after the following manner:

Each employe who has been continuously in our employ for six months or longer will be presented with a paid-up life insurance policy, on which the future premiums will be carried by the Company as long as insured remains in our employ. The amount for which an employe is covered is based on the length of service and is graded as follows:

After Six Months	$ 500.00
One Year	750.00
Two Years	1,000.00
Three Years	1,250.00
Four Years	1,500.00
Five Years	1,750.00
Six Years	2,000.00

The amount of insurance will be automatically increased until the maximum amount ($2,000) is attained.

At the end of the first six months of service the employe is requested to bring to the attention of his superintendent the fact that he is entitled to insurance.

Employes whose service with the Company terminates for any reason whatsoever, may continue this insurance, without physical examination, if application is made to the Equitable Life Assurance Society within thirty-one days after termination of employment.

It is interesting to note that the Company is now paying the premiums on $553,000 of Group Life Insurance.

This feature was instituted in November, 1920, in appreciation of the loyalty and efficiency of employes.

Since its adoption, to December 31st, 1921, $8,000 in death benefits has been paid to beneficiaries of deceased employes.

When it comes to the social side, let us tell you that there were 250 in attendance at the very gorgeous costume masked ball held a recent Saturday evening by the Employes Association of this live company.

The 1922 officers of the Employes Association are: President, W. H. Ellison; Vice-President, T. E. Hartigan; Secretary-Treasurer, R. B. Tallman; while the directors for this present year are as follows: Gas Distribution Department, D. H. Perkins; Electric Distribution Department, H. N. Peck; Electric Meter Department, Sam McGovney; Shops and Stores, W. T. Hanrahan; Garage, R. B. Campbell; Station "B", R. E. Thompson; Suburban Districts, W. A. Lambert.

VALUE OF SERVICE AS IT AFFECTS RETURN

Electrical World, A. G. A. Abstract

THE Public Commission of Pennsylvania, in dealing with the rate of return, has declared that the problem relates to "not what will pay a fair return in the statutory meaning of that term, but rather what is the reasonable rate which a respondent may charge for service that it may properly function and perform its public duty, so long as it remains a public utility securing thereby the maximum revenue it is able to collect to pay operating costs, and any balance that remains to be applied as a fair return..... Rate regulation does not include a guaranty of return on fair value unless such return can be properly earned." In formulating its rates, the commission asserts, a company is bound to take into consideration the extent of territory and population of the community it serves, and the needs, convenience and necessities of its patrons are also factors to be considered.

ABOUT THE CAMPS

SANITATION is a most important factor in the successful development of new gas and oil fields, declared A. W. Ambrose, chief petroleum technologist of the Bureau of Mines, before a recent gathering of Pan-American diplomats. Everyone is familiar with the fact that the construction of the Panama Canal was greatly delayed until problems of sanitation were conquered, said Mr. Ambrose. The health and contentment of the workers is a necessary adjunct to such a plan and companies should be urged to provide healthful and comfortable quarters for their men. If the camp is to be a permanent one, companies should also install adequate sewer systems. Where the camp must be built in a marshy locality, care should be taken to drain the camp site and surrounding territory to prevent the spread of malarial diseases. The value of amusement halls and the promotion of social life in isolated communities cannot be overestimated, for the contentment of the staff and workmen is essential to successful development.

An interesting article upon this subject was published in the GAS INDUSTRY Magazine for January.

Philosophy goes no further than probabilities, and in every assertion keeps a doubt in reserve.

The Problem of Selling

"The Gas Companies Should Invite the Fullest Publicity of the Press. The Critical Situation in the Gas Industry Seems to Arise From the Fact That the Public Knows so Little About the Industry"—
Charles C. Parlin

ROUNDS of applause followed an address by Mr. Charles Coolidge Parlin of the Division of Commercial Research of the Curtis Publishing Company, Philadelphia. This address was delivered before the American Gas Association at Chicago. Those who applauded were gas engineers, gas managers, gas company presidents, as well as commercial managers and commercial men of many gas companies. Mr. Parlin said:

"In any industry the problem originally is production and only when production has reached a stage where sales resistance is encountered does the need of selling become clear. Such a day has come in the gas industry, and today the greatest problem of the industry is selling."

Note that Mr. Parlin stated that "the greatest problem of the industry is selling." In making this statement, he certainly justified every effort that was put forth by the National Commercial Gas Association, and to develop systematic gas and gas appliance selling and to promote association cooperation between men in the various gas companies having in hand the selling of appliances as a leader to the selling of gas.

Mr. Parlin added: "The problems of engineering and sales are so radically different that those who give concentrated attention to the one are apt not to succeed well at the other. Engineering has to do with physical phenomena, with chemistry and mechanics. Selling deals with the human mind, with psychology, imagination and inspiration."

Here again Mr. Parlin commends the foresight and thought that resulted in the formation of a great commercial organization in the gas field known as the N. C. G. A. While engineering had been the major factor in gas progress in this gas field, sales and the commercial side it was seen must of necessity play a great part in the future of the industry against ever increasing competition.

Today, as then, we have evidence of the fact that the two great departments in the gas field, namely, engineering and commercial, are so interdependent, so closely allied, each is necessary to the other though each has its separate and specific line of work to perform. The engineering side does not meet the public, but it provides the element for the public, while the commercial side does not provide the element but does meet the public. We should meet the public, should take the public into the gas company's confidence and should keep peace between company and public, also between public and company.

Following are some questions asked by Mr. Parlin. These should be mentally answered by the reader.

"Did you ever stop to visualize the contact which the average citizen has with your company? John Jones is a man of intelligence and has used gas for years, but what does John Jones know about gas? He has heard that he gets water gas. Does he know that it is not made out of water? Does he know that oil is one of the principal ingredients, that the price of oil has risen greatly and so far as can be foreseen will not again return to the pre-war prices? He may have read something about candle power. Does he know today that with modern burners candle power tests have little significance and that gas today must be judged on the basis of heat performance?

What does John Jones know about your company? You have published many financial statements. Has any one of them been published in a form which John Jones can understand? Has any one ever explained to John Jones the significance to him of those parallel columns of figures?"

Mr. Parlin went on to state:

[illegible] statements concerning these financial operations prepared for the [illegible]? How many of the gas companies have [illegible]?

Just what contact has John Jones had with your company? Once a month or once a quarter he gets your bill. It demands payment of a certain sum based on the gas meter. The Gas Association has done good work in educating John Jones as to what his meter means. There is an opportunity, however, for the local companies [illegible] the effort of the association in this direction [illegible] the outstanding fact on the bill [illegible] many have gas well [illegible] explain that the [illegible] require this [illegible] gas [illegible] your [illegible] gas will be [illegible]

[illegible]

The merit of originality is not novelty, it is sincerity —Carlyle

Jones or is there any place he can ask questions and get informative replies? If so, does John Jones know where that place is? Or does he grow sullen, feeling that somehow he is the victim of a hold-up? The danger to the gas companies is not in the few who complain openly. They can be answered. The danger is in the thousands who say nothing, but in their sub-conscious selves develop a distrust of the gas company.

"The gas industry has concealed the romance of its accomplishments. The telephone and the electrical industries have seized upon the dramatic incidents of this industry. The girl who holds her post as a fire rages receives the plaudits of the press. Who ever saw dramatized the story of the grimy man in overalls who, on a wintry night as furnace fires prove inadequate, furnishes gas for the whole city? The gas supply is put under a supreme strain and only by his efforts is an uninterrupted service kept up. The city is thus saved from hardships and from the disaster which a briefly interrupted service would entail. The whole country, the methods of producing gas, and the financial operations of the companies to the layman seem shrouded in mystery.

"Dislikes are founded on ignorance. People hate that which they do not understand, and today the critical situation in the gas industry seems to us to arise from the fact that the public knows so little about the industry.

"Much has been done by the gas company in the way of service to its patrons. John Jones has come to see very clearly the obligations that the gas company owes him, but what has been done to develop in John Jones' mind a sense of responsibility to the gas industry for its successful operation? He takes civic pride in many things, but does he take pride in the gas company, and in having the service right? Does he feel that he owes a responsibility to his community to help the gas company in the development of its industry?"

Some of the suggestions made by Mr. Parlin are as follows:

"1. The gas company should invite the fullest publicity of the press.

"2. It should train employees so that each employee who comes in contact with the public, either officially or incidentally—almost every employee comes in contact with part of your market in some way—may know what to say about gas, and may be your salesman at all times. In this it must be borne in mind that a salesman effectively can sell only that which he understands and in which he sincerely believes, and that the first sales task is thoroughly to sell your own representatives.

"3. Monthly bills may be revised so that they will be informative and give an impression of fairness and courtesy.

"4. In the local press, a dignified, informative campaign may be conducted over the signature of the gas company, not a splash for the moment, not a defense nor an attack—a persistent, well thought-out campaign of education to enable the public to have an understanding and, therefore, a sympathy with your problems.

"5. A national campaign of education may be undertaken to place a solid foundation under the campaigns of local companies.

"You have an effective and an important story. The interest of the consumer and your interests are in the last analysis fundamentally alike."

Mr. Parlin at this point touched upon that very interesting subject of the gas company and the merchant by saying:

"Where a gas company sells appliances, we believe there should be a separate department for the sale of appliances in charge of a person of sales ability and that this department should be made self-supporting—meeting all its own overhead and other expenses, and showing a net profit on the year's operation. It does not seem a sound policy to require consumers of gas to pay for losses on appliances sales.

"If the gas company operates a sales agency, shall it control the entire business of the city? In some minor places where the potential volume is small, that may seem the best solution, but wherever potential volume is sufficient to support two or more sales establishments competition will develop trade.

"It at least seems clear that where- independent agencies are selling good appliances, thereby helping develop consumption of gas, they are entitled to fair competition from the gas company and should not be unfairly prevented from doing a profitable business.

"The gas company's sales department cannot be expected to carry all the good makes of a given appliance. If independent dealers carry some of the good makes which the gas company cannot handle, friendly competition will increase interest in the appliance and build business for both."

Comparing the growths of electricity and gas, Mr. Parlin said:

"The number of gas meters in use apparently exceeds the number of homes wired with electricity, but electricity appears to be rapidly gaining. In some sections, for example, the Middle Atlantic and East North Central, the census figures of 1919 show materially fewer gas stoves and heaters connected with mains than in 1914.

"The most striking fact brought out by the census of 1919, however, was that the value of electric heating apparatus produced in 1919 almost equalled that of gas and oil stoves combined.

"Of the electric heating devices in 1914, more than three-fourths were in cooking devices and flatirons.

"Even if the element of competition between gas and electricity be disregarded, it nevertheless must be a significant object lesson to the gas industry to note what any casual observer cannot fail to see—that the electric industry has its wares better advertised, better displayed, and more efficiently sold.

"In how many cities in the United States today are gas appliances attractively displayed? Let us grant that it may be easier to make a brilliant display of electric lights than of gas heaters, have the dealers in gas appliances done what they might? There are a few fine dis-

It is as difficult to appropriate the thoughts of others as it is to invent.—Emerson.

plays of gas appliances for example, the one on Michigan Boulevard, in Chicago but most of the displays which we found were not calculated to draw trade As you travel about the country, to how many windows of gas appliances are you attracted to look and linger, into how many of these stores do you find yourselves drawn by the display at how many times is a desire to own a gas appliance kindled into how many windows do you find an interested crowd wistfully looking?

What has the manufacturer done to help the dealer to trim his window and make his store attractive? Have they offered prizes, aroused friendly competition and featured nationally the winning displays?

The manufacturer, in turn, says that it is impractical for him to develop markets so long as he has the opposition of gas companies Improvement in the sale of gas appliances seems to begin with the reformation of the gas company's attitude The gas company cannot carry all the manufactured articles, but the gas company can give its moral support to every man who is selling good appliances, doing something to develop the use of gas in his community

The day of easy selling is past The special requirement of the manufacturer is intensive selling In the past year manufacturers who sat idly by waiting for people to come and buy their wares, still wait Those who aggressively pushed their products found there was a market for those who sought it

In the last analysis the essential problems of the gas industry seem to be the same as those of other industries

First Quality

Second Advertising

Third Aggressive selling

Advertising is a process of education The recognition of the merit of a product is the thing which can be gained by advertising Salesmen must be sent out and what then is the use of advertising if personal sales effort must be used? Advertising is not as powerful as personal selling The most powerful sales force is the merit of the product itself, and the next most powerful force is that of personal selling Advertising however reaches the people with every appearing

Right here let us interject the thought that if a salesman were to visit and talk product with five merchants a day it would take him over a year to reach as many as are reached by a single issue of the Gas Industry magazine and since buyers and managers are constantly changing in an industry, by the time this salesman had made his rounds of a year counting on more than those reached by a single issue of our publication many of those whom he had sought to interest on his first call would have found other positions elsewhere would have been incapacitated for business through ill health, would have passed away, or, in other words, for one and another reason, would not be found Thus the initial work would all have to be done over again and the interval between visits would be an entire twelve months, while advertising comes again and again, renewing the touch monthly between seller and buyer

Mr Parlin said of advertising

"Advertising creates a great opportunity to put zest into the efforts of men who are intelligent, to go out and work Furthermore, it creates a market When your salesman goes to the door, 60 per cent of all the sales are apt to be made the first time he calls on a customer, and thirty per cent of all his sales may be on the second time, and not more than ten per cent after the second time It is important that salesmen get the name on the dotted line the first call There is the opportunity Advertising prepares the market prepares the mind, so that the order when the salesman calls, will come much easier"

QUESTIONABLE ADVERTISING

A CORRESPONDENT has sent us a clipping from a Pittsburgh newspaper The advertisement is a specific one It sets forth information wholly regarding the advertiser's handling of a certain specific type of range We will not mention the name of the range since, no doubt the makers of the appliance would decry any such statements as appeared in the advertising matter, but it would be passing by a serious matter were we not to print and comment upon that portion of the advertisement which appears herewith and in which the advertiser directs the attention of the public to a statement made by the local coroner regarding a disease that has caused much consternation, the advertiser quoting the name commonly given to the disease, then coupling up with it a warning against the use of gas unless it is used in a certain type of gas range The portion of the advertisement that we refer to reads as follows

> Coroner McGregor warns us about
> "Sleeping Death"
> Carbon Monoxide Gas
> Be sure your cooking range has a closed top

We have forwarded the attention of the A. G. A. office to the advertisement feeling that official notice should be taken thereof We have also notified the Natural Gas News of the appearance of the wording of this advertisement having also similarly notified the Bureau of Mines Department of the Interior at Washington of which department has been advocating extensive propaganda for natural gas held as in the manufactured gas field with the exception of a certain [illegible] that we feel it does not criticise as warranted [illegible] the element of conservation to which the Bureau of Mines is strenuously arming

Our success depends on how well we can express ourselves in terms of work — *Nairo Raja*

He that can have patience can have what he will.—Franklin.

TRADE-NAME CONTEST

The Prize Winners in the Scott Gas Appliance Trade Name Contest Are Now Announced

AT the recent annual convention of the American Gas Association at Chicago the Scott Gas Appliance Company, Inc., of Washington, D. C., announced a trade-mark-name contest, a name that should adapt itself to the Scott line of ranges.

The first prize offered was an all white enamel Scott Gas Range, valued at $200.00, and the second prize was $100.00 in gold.

Due to the illness of one of the judges, the selection of the winning name was somewhat delayed. However, a unanimous decision has now been reached by the remainder of the committee of judges, after careful consideration of all the names submitted.

The winner of the first prize was Frank A. Woodworth of 60 Wall street, New York, of the gas engineering department of the Henry L. Doherty organization. His entry was the "Scot-For Thrift" trade-mark name design, with the stipulation that either "Scot" or "Scott" could be used in connection with the design.

The second prize of $100.00 in gold was awarded to A. F. Beringer, vice-president of P. W. Brooks & Co., which operates a number of public utilities companies. His suggestion was "SCOTT TRI-POWER", suggestive of the triple usefulness of the Scott Gas Range.

The judges' job was an arduous one, for several thousand names were submitted. They came from every branch of the gas industry and from every section of the country. It was a truly popular contest, with entries by heads of big companies, by shop men, installation men, salesmen and office workers. Many of the names and phrases suggested fell short of meeting one of the chief qualifications of the contest: they were not capable of being copyrighted, as stipulated in the conditions. Mr. C. Hugh Duffy, of Chevy Chase, Maryland, one of the judges, who is a patent attorney, passed on the protectability of the various names submitted.

The Scott company went at this matter in a wholehearted way and now have a name and name-design that it can capitalize. It is no wonder that the contestants ran up into big numbers; for the prizes were such as to make the proposition an exceedingly attractive one. Watch for the new trade-mark-name on the product and in the concern's publicity matter.

LUNCHING EMPLOYES

IN an interesting paper by L. J. Joyce of Boston, before the New England Gas Engineers, Mr. Joyce in referring to installations in large industrial plants and department stores, said, "This class of business has grown immensely during the past few years. We have very fine kitchens installed in our department stores. These restaurants are run on the co-operative system and the stores feed their help at about cost. They realize that it is a good policy to feed their employees on their own premises, for they can give them a better meal than they could ordinarily get in a restaurant for less money. Appliances used in this class of business are ranges, broilers, steam tables, coffee and hot water urns."

This system of localizing the providing of luncheons for employes having grown immensely all over the country, has of a truth opened an entirely new channel to gas companies, not that this has occurred all of a sudden, no, it has been a growing matter, but is yet in its infancy. We believe that a live gas manager could personally in smaller centers, not too small for such service, or through the aid of competent sales-service assistants, in larger center, greatly develop the business of his company along these particular lines.

Gas has lost some of its old-time percentages in certain directions, frequently these losses arising from carelessless or inattention on the part of gas managers, but new fields are springing up on every side that will compensate for these losses. However, it is most unfortunate to have lost, even if one gains elsewhere, since an old saying is "It is not what we make, it is what we save." In the field of gas interests, as well as in all other fields, a good slogan would be, "Let us both save and make."

One of the great dangers is that of always going after a new butterfly, instead of making it a first purpose to keep the "home fires burning" as well as to seek new fields to conquer.

Frequently human nature leads an individual into that fairy field of always looking for something new or something different, causing a loss of interest in that which one possesses. The former is commendable insofar as it is not carried to excess, and does not cause a slackening of interest in that which has built a concern from a beginning to a good reasonable result. Employes should be carefully guided, especially men of sales forces, in order that they may be well balanced, they being made to fully realize that to HOLD what they have is a major necessity, while gaining new outlets is a commendable achievement.

Not a few gas companies have allowed their illumination business to slip from them. They have listened to that ever luring siren, namely, the following of the way of least resistance. Those companies that have retained a large percentage of legitimate gas lighting, and have supplemented this business by the opening of new fields are surely to be commended.—The Editor.

Quit the world, and the world forgets you. Disraeli.

The specially occupied store could be made to answer two purposes, one the selling of the securities, but in a major way the bringing of the gas company down from its rostrum, as viewed by the public, to meet the public informally, for the while of the exploiting of security-sales.

If gas company employes are used during a sales campaign of gas securities, the expert in charge, possibly an exceedingly apt bonds salesman could organize teams of two or three to the team with a team supervisor for each section, allotting to these teams certain districts in the city. Then publish in the daily newspapers (paying for the space) the names and perhaps the portraits of the several teams, indicating within what districts the teams will operate that day. Included in the notice should be a little statement regarding the plan and an invitation to watch the bulletin board of investors' names grow at the temporarily leased store.

It would not seem necessary to go further into details, for the inventive mind of the gas manager will easily put the meat onto the bones of such a plan. We might, however, add one suggestion, namely, that in the case of bulletin board use, a photograph of the board when a section of it has been well filled, might be converted into a good cut to be run in paid-for-space in the daily newspapers with the statement that the original, namely, the board itself bearing the names of your neighbors and friends may be viewed at No. 240 Main Street, where, between the hours of eleven and three, the manager of the gas company, Mr. John Doe, and several of his associates would be glad to meet those who are customers of the company, with whom they most earnestly desire to become personally acquainted.

We are quite certain that a bulletin board operated somewhat after our suggestion would be exceedingly helpful to a gas company desiring to locally float a share of its securities.

ANOTHER FINE MOVE

A CALL-TOGETHER of representatives of institutions in Portland, Oregon, handling gas appliances recently was sent out and roundly accepted. Those present were certainly a representative bunch, as plumbing and heating concerns, furnace companies, American Radiator Company, and various other merchandising concerns were represented. The idea of the gathering was to afford an opportunity to propound the question, "Why not an organization of all of those in Portland handling gas appliances, that these institutions among themselves and with the utilities company, might become better acquainted, thereby to discover means to eliminate difficulties and in general advance the interests of gas appliances?"

An association such as was considered and accomplished, will certainly go a long way toward reconciling differences where they exist, and preventing difficulties that do not already exist and yet might dawn upon the horizon. It, at the same time, will afford the "traders" of the city an opportunity to better understand gas appliances. These various interests will no longer, so it appears, continue without that bettering element which comes with the get-together idea.

A suggestion made by Mr. E. L. Hall, General Superintendent of the Portland Gas & Coke Company, resulted in the carrying of a measure to the effect that the stationery of the organization shall bear upon it the following imprint, "Gas Appliance Dealers Association."

Officers were elected, chosen from among the merchants. Who will follow this move, in other cities?

IN THE RIGHT DIRECTION

MR. P. S. ARKWRIGHT, whom we all remember so pleasantly, those of us who attended the N. C. G. A. convention in Atlanta, Ga., some years since, and who is President of the Georgia Railway & Power Company, recently grasped an opportunity to urge through an address which he delivered before the Retail Merchants Association, a degree of co-operation between merchants and utilities companies, and vice versa far exceeding any such condition existing in the past.

Mr. Arkwright featured the idea of gas companies aiding the merchants, and of merchants assisting the gas companies in an endeavor to develop a better understanding between utilities and the people. There is no doubt but that the merchant is in line to figure largely in the calculations of the gas company, and rightfully so. The merchant must be reckoned with; the time has come! We have long predicted and advised broad and wholesouled co-operation between gas companies and merchants.

PAST PROFITS CANNOT AFFECT VALUATION

Electrical World, A. G. A. Abstract

IN valuing the property of a telephone company, the Nebraska State Railway Commission emphasized the point that the past profits of a utility, even where these have been excessive, have no bearing upon a valuation proceeding, in which all the physical property used and useful in the business of a utility must be considered, notwithstanding that some of it may have been built out of surpluses over and above a moderate rate of return. "Testing the effect of rates in the past," the commission observed, "is a judicial process; making rates for the future is legislative. The two processes ordinarily merge in a rate case. In a valuation case, however, the commission has no power to take part of the property of a utility and restore it to the public or deny its ownership to the utility. In a rate case the commission can take cognizance of the effect of past rates and whether they have been usually remunerative."

Too many young men empty their sand boxes on the first grade.

Why Accidents?

A List of Accidents and How They Occured. The Exercise of Care Would Have Prevented Much Suffering

A STRONG effort is being put forth to reduce the frequency of accidents as we all well know. Accident conferences, conventions, departmental work, etc., all looking to a lessening of [illegible] and consequent costs and financial losses have [illegible] within a few years past, and as a means of [illegible] we are publishing a partial list of accidents compiled from actual gas company experiences.

If you were to have a [illegible] read over this list and then [illegible] upon them a vision of the misery, pain and distress that has resulted, might not then you realize how the accidents might have been prevented and [illegible] that like accidents are prevented in our company and in our patrons.

ACCIDENTS TO EMPLOYEES ON OUTSIDE WORK

[illegible]

ACCIDENTS TO CITIZENS ON STREETS

[illegible]

Prejudice is the child of ignorance.—Hazlitt.

furnace used by the Co-operative Foundry is of the full muffle type although semi muffle gas fired furnaces are sometimes used for cast iron work. In the full muffle type of furnace the chamber in which the gas is burned is entirely separate from the chamber in which the material is placed to be enameled.

In the illustration the combustion chamber is in the bottom of the furnace and the gas burners are shown directed into this chamber. These burners are of the safety type invented by Mr. Lundgaard, formerly in charge of the Industrial Department of this company.

The hot products of combustion pass up and around the muffle walls to the waste gas flues which are in the top of the arch. The muffle walls and floor panels are constructed of fire clay slabs with tongue and groove joints scarcely cemented. These panels are 3/4 inches in thickness and 1 1/2 inches thick at the joints. The muffle is supported by fire brick pieces placed at regular intervals the opening between the piers serving as flues for the burners.

The wall of the combustion chamber around the muffle is made of 9 inches of fire brick insulated with 4 1/2 inches of Sil-O-Cel insulating brick sheated with an 8 inch red brick wall thus giving a total wall thickness of 22 1/2 inches. The furnace is substantially braced with channel iron back-stays and tie rods as shown in the illustration.

On top of the furnace, but not shown in the illustration, is a cast iron sectional recuperator, housed in a 4 1/2 inch fire brick box. This recuperator preheats the air necessary for combustion, reclaiming considerable heat from the waste gases from the combustion chamber before they go to the stack. The air leaves the recuperator at 800° F. to 1000° F., which gives an increase in theoretical flame temperature of 400° F. to 500° F. The overall thermal efficiency of the furnace is thus increased about 20%.

The mixture of gas and air at the burners is controlled by means of a ratiometer, another invention of Mr. Lundgaard's. The ratiometer and main gas control valve are shown in the upper left hand corner of the illustration. Regardless of gas consumption at any time the ratiometer supplies the correct amount of air for complete combustion and the control of the furnace is reduced to the manipulation of one valve in the gas line. This valve is operated by means of a chain at the left side of furnace.

The muffle in this furnace is 42 inches wide, 108 inches long and 30 inches high inside. The furnace has an average output of 5,400 pounds of cast iron one coat in 10 hours on a total gas consumption of 1,400 cubic feet which is an average of 26 cubic feet of gas per pound of cast iron per coat.

The output of this furnace is of a quality that cannot be surpassed by any method of fusing enamel in use today in this country.

—Courtesy "Gas & Electric News," Rochester, N. Y.

THE FUTURE OF LIGHTING

MR. S. GULBRANDSEN of Philadelphia in a recent address before the Illuminating Engineering Society, an organization formed some years since for the purpose of advancing the interests of illumination, not by one single process, but illumination produced by any and all processes concludes that the illumination of the future will be that of phosphorescence. Mr. Gulbrandsen said that this might not come for years, but that he feels it is a sure future in the industry. "The present method of lighting, both gas and electric," said he, "reminds me of the Chinaman who burned down the house to roast his pig."

A statement that will astound many was as follows: "In both electric and gas lighting but a fraction of one per cent of the energy of a coal pile is returned to us in the form of light." The speaker's theory is that such a condition cannot continue, that some day, as he said, "Some day we shall find a method of producing light without the accompaniment of such a vast quantity of heat. In fact it is already being done in a small way in commercial work." Illustrating this, Mr. Gulbrandsen exhibited an Ingersoll watch, the dial phosphorescent by virtue of a self luminous paint having been used. "Thus," he said, "one can tell time in the dark, the method of producing effect being a mixture of phosphorescent zinc sulphide and a minute quantity of radium or mesothorium. We in the gas lighting business, are interested in this because mesothorium occurs together with thorium in Monazite sand, and is recovered during the process of manufacturing thorium, used in the manufacture of the incandescent gas mantle.

"The problem of the future," said the speaker, "is to make use of our knowledge of results attainable, results with which we are familiar, and then to multiply these many times. This field certainly offers attractive research."

In the meantime communities, individuals' homes, shops etc., must be supplied with artificial light produced as we now know it, and it becomes the part of gas companies to find and to get as much of this illuminating business as it is possible for them to control and to gain.

[illegible] even though this transition is a matter far distant in the future, let it be from gas to [illegible] as well as from electricity to phosphorescence instead of from electricity to phosphorescence [illegible] the electric man would not [illegible] that electricity should have [illegible] gas [illegible] the universal method.

[illegible]

[illegible]

Less of men who have traces of greatness in their makeup spoil everything by looking over the traces.

business which can be properly and well handled with gas through the medium of that wonderful invention, the incandescent mantle; a medium not based upon 25 cycle, or 60 cycle throbs that, especially with the 25, the cycle electric system is no noticeable to the eye, but instead is based upon continuous, uninterrupted delivery of illumination nearest, without the intervention of special glass effects, to that glorious illumination which we have in the rays of the sun.

EMPLOYES MENTAL TESTS

By ARTHUR OTIS
Scientific American, A. G. A. Abstract

IN the *Journal of Applied Psychology*, December, 1920, Mr. Arthur Otis, in an article on "The Selection of Mill Workers by Mental Tests," presents some surprising results.

At the close of his army service he installed a system of mental tests for prospective employees (both clerks and mill workers), in a silk manufacturing company. A large percentage of the latter were foreign or illiterate.

The clerical intelligence test proved to be of decided value in the selection of members of the office force and has been adopted for permanent use. The results of an extended tryout of the performance intelligence examination, however, are both startling and baffling and cast an ominous shadow over the future of strictly intelligence tests for manual workers.

The performance scale used in this connection consisted of thirteen tests covering a wide range of mental activity. The examination of an individual lasted on the average of an hour. In all, some 400 employees were tested. These were placed in three groups according to their productive ability ascertained by careful investigation. In the last analysis, it was found that the correlation between intelligence and productive ability was zero! No amount of age grouping or length of service grouping would bring anything but zero out of the correlations.

Commenting on this result, the writer says: "The tests did measure intelligence one may be perfectly confident. The ability of clerks in these tests were found to be distinctly above that of mill workers as a class. The intercorrelations between the several tests ranged between .40 and .75, denoting a 'reliability coefficient' for the the whole scale of .97. When thirteen widely varying tests tend strongly to measure the same ability, that ability must be 'general ability' or intelligence." It cannot be asserted confidently that every examinee did his best on the tests. There was lacking the incentive that is present when an applicant seeks employment.

The conclusion drawn from these researches is that intelligence is not only not required for most operations in a modern mill, but may even be a detriment to steady, efficient routine work. What qualities are required remain to be sought. They may be stolidity, patience, inertia of attention, regularity of habits, etc.

HUMAN ELEMENT IN VALUATION

Electrical World, A. G. A. Abstract

IN a decision ordering the Pacific Gas & Electric Company to pay back to its gas customers more than $2,000,000 charged by it in excess of the tariff fixed by the City of San Francisco, the Federal District Court made these observations on valuation: "The valuation of a plant of this kind is largely a matter of guess work. Unlike cotton, wheat and other commodities that are bought and sold daily in the market and have an established value, gas plants are seldom sold, and if one should be sold, the selling price offers a poor criterion by which to fix the value of another where the surrounding circumstances may be entirely different. Noted engineers will differ, and differ widely, as to the value of such plants. The difference between the engineers who come before this court so highly recommended by the master and by counsel is measured by millions and not by thousands. A difference of 10 per cent in the appraisement or valuation should be accepted as a matter of course rather than as a matter of surprise. The courts have no monopoly in the privilege of appraising or guessing. They must accord the same rights and the same privileges to the Board of Supervisors, and the mere fact that they may differ from the board in their conclusions does not necessarily establish the charge of confiscating property or denying to the citizen the equal protection of the laws."

KEEN SENSE OF RESPONSIBILITY

QUITE recently a woman in Buffalo concluded that in her estimation it was time for her to pass to "the other side", and that gas would be a quick, sure and comparatively inexpensive method of taking her own life. However, she apparently felt that even this means would entail a certain amount of cost upon the gas company. Therefore, when preparing to take her life by inhaling gas, she wrote a note to the gas company enclosing $3.50, the amount she estimated would be used in the process of taking her life, and in waste before the leakage of gas would be discovered.

This, we believe, is the first instance, at least it is the first we recall, in which so keen a sense of responsibility for debts incurred has been made manifest, the nearest approach being possibly the return of moneys stolen, years after the theft.

The foregoing indicates the honesty of American citizens, as well as indicating a citizens' estimate of the value of a gas company's product.

The case was a sad one, but the instance was a most unusual one.

Start some kind word on its travels, and do it now.—Selected.

WHAT WRINKLE MEN GOT

SOME men *get it in the neck*, other men [illegible] while still others *get it in their pocket*. Of this latter class were men of the Manufacturers Light & Heat Company, of the United Natural Gas Company, of the Ohio Fuel Supply Company, whose efforts doubled the amount of prize money given by the Natural Gas Association to the prize winners who supplied the best and most practical wrinkles presented at the Natural Gas Association convention [illegible] at [illegible] Cincinnati.

Mr. [illegible] H. [illegible] Manager of the Ohio [illegible] Company; Mr. Raymond Cross, President of the United Natural Gas Company; Mr. H. A. Quay, General Manager of the Manufacturers Light & Heat Company [illegible] positions, were quick to note the [illegible] encouraging work on the part of their [illegible] over real cash as we have noted [illegible] were clever enough to take the prizes [illegible] association.

[illegible] heard of [illegible] promise being made to [illegible] rewards on account of wrinkles [illegible] in Kansas City next May. [illegible] companies have [illegible] upon very thin [illegible] a precedent that they themselves [illegible] established.

[illegible] last year. Will they not be [illegible] the gas men this year? [illegible] the Wrinkle Editor, care Natural [illegible] of America, Pittsburgh, Pa.

GASOLINE TAXES

T[illegible] taxing gasoline in order [illegible] would seem to be [illegible] most [illegible] well the producers and [illegible] themselves [illegible] backed by the automobile [illegible] and pleasure industry. [illegible]

that the oil industry is already paying more than its just share of State and National revenues.

It is not the interests of the soldier that are being fought but it is the proposed plan as proposed.

AMONG THE CONVENTION EXHIBITORS

OF course there will be many more who will exhibit at the Natural Gas Convention at Kansas City the middle of May than those who have up to date [illegible] decisions as to whether they will or will not exhibit. However, among those who have indicated that they purpose exhibiting are the following:

The Chaplin Fulton Mfg. Company, Pittsburgh, will show complete line of Fulton regulators.

The J. H. McKain Fishing Tool Co., Parkersburg, West Va., full line of oil and gas well fishing tools.

[illegible] M. Hecter Sons & Co., Inc., Butler, Pa., will show line of packers, corrugated friction sockets, swabs, sand pumps and other drilling supplies.

The Bryant Heater & Mfg. Co., Cleveland, O., Bryant gas boilers and water heaters.

The Sprague Meter Co., Bridgeport, Conn., to show their standard line of meters and the new line of [illegible] type single valve meter.

Oil Well Supply Co., Pittsburgh, Pa., Pumps and supplies for field operations.

Wm. M. Crane Co., New York City, line of [illegible] ranges and other appliances.

S. R. Dresser Mfg. Co., Bradford, Pa., will show Dresser couplings, sleeves, clamps and fittings.

The C. & G. Cooper Co., Mount Vernon, O., Cooper engines and compressors photographically displayed.

M[illegible] Manufacturing Co., Chicago, will have on exhibition [illegible] lighting [illegible] and other M[illegible] products.

[illegible] Meter [illegible] Cleveland [illegible] show full [illegible] meters.

[illegible] feature [illegible]

[illegible] gas industry [illegible] interest [illegible]

The power of punishment is to silence, not to confute.—Johnson

RECORD OF A CENTURY

FULLY a century ago, so old records indicate, Cumberland County in east Kentucky was known to contain gas, so some have said; others, that it was known to contain oil, and still others, both oil and gas.. Cumberland County has slept these many years so far as its supply of these elements is concerned. It is a district far back from transportation, one of those sections, in a sense hidden from the world, yet where nature-treasure lies buried, possibly in vast quantities.

Not many years ago it would have been impossible to reach Cumberland County's interior district with heavy equipment, as that territory can be reached today. Of course, horses were then available, but today not only horses but certain types of tractors that surmount practically any difficulty, as well as enormously powerful trucks, may be swung into service to convey boilers, engines, drilling equipment, etc., in fact, all of the necessaries from not near-by, but nearest-by railway discharging points, or perchance during the season of navigation the prospector will find his way into the borders of this "far away region" by descending the Cumberland river, and then like our ancestors, but with the modern "prairie schooner," the tractor and the truck, blaze the way back into a district as yet largely unknown in the matter of its wealth, even to those who are experienced in the fields of gas and oil.

Since days of long mileage via pipe-lines have come into existence and in view of the caterpillar tractor, and other types of obstruction overcoming mechanism, this far away county is likely now to spring into existence as one of the big producing sections.

Had it not been for the difficulties of transportation, etc., it is likely that Cumberland County would have long since come into her own.

We are informed that sands designated as Trenton Rock, but that locally are known as lower and upper Sunnybrook, would seem to be a source of Cumberland County oil.

Much interest will be felt by men of the industry in developments in this which promises to be an excellent field, when opened up.

REMEMBERS OLD FRIENDS

MR. W. P. CRAIG, one of the former staff of the United Natural Gas Company of Oil City, has for some time past been living in Maryland, having given up the superintendency of gas interests.

We all realize that in the region of Baltimore are to be found some of the best oysters to be had in the waters of the United States, and Mr. Craig, realizing how good first-class salt-sea oysters would taste to men in the interior, sent a barrel of bivalves that were gathered in the Chesapeake, to his former men and associates. These fine oysters were recently served to officers and men of the United Company at a dinner held in the Y. M. C. A. of Oil City.

At the conclusion of the dinner there were brief addresses, and musical selections by a male quartette composed of men from the company. Thus oysters, and clever addresses, and music supplied all that was necessary to induce a big, hearty, heartfelt vote of thanks to Mr. Craig for the remembrance.

THE CASH BONUS FOR EX-SERVICE MEN

THERE has just been received at our editorial office from the Chamber of Commerce of the United States a setting forth of the result of a referendum vote upon this subject. The result of this ballot showed 72 per cent of the interests forming the National Chamber, voting against the enactment of a law providing such. However, expressions were strong in favor of a form which would not be indiscriminate. In other words, favoring the care of those disabled, etc,, such as is now being carried on. Also, assisting others not disabled, but whose needs might require assistance.

It would seem that the desire on the part of the Chamber of Commerce of the United States was not to prevent care of needy ex-soldiers, not an effort backed by a selfish motive, but to arrive at the opinions of a vast number of our very best thinkers as to what course should be followed at the present juncture.

Votes were cast by business organizations in 375 cities, 46 states, in the District of Columbia, Alaska and Hawaii.

In concluding, the communication states:

"Adequate relief for the disabled still remains the first step in the National Chamber's program. A present expenditure of more than $1,000,000 a day for disabled men is evidence of the desire of the people that those veterans who suffered physical or mental impairment shall be cared for adequately until returned to a life of usefulness and independence. Beyond that point the National Chamber will continue to advocate legislation for the benefit of the healthy uninjured veterans which will include opportunities for vocational training and land settlement aid, constructive measures which are best calculated to make every ex-service man an independent, self-respecting member of his community."

LOUISIANA CONSERVATION

WORD comes to us from New Orleans to the effect that with the approval of Governor Parker of Louisiana, M. L. Alexander, Commissioner of Conservation, has issued announcement that the use of natural gas by carbon black plants in the Monroe field shall be curtailed, and that 20 instead of 25 per cent may henceforth be used for this purpose, the aim being to conserve natural gas for domestic and industrial utilization.

It is not only wise to practice what you preach, but practice about ten times as much.

AROUND THE BELT

New Wells, New Pipe Lines, New Contracts, Additions and Extensions. A Fund of Valuable News Gathered for the Journal Through Many Sources

TRADE PERSONALS

[illegible] L. M. has resigned from his connection with [illegible] Well Supply Company's store at Basin, Wyoming [illegible] and is now head of the Lenderker Tool Company's [illegible] at Basin

[illegible] W. L. who has been connected with the Oklahoma Gas & Electric Company, Oklahoma City, Okla [illegible] a period of almost fifteen years, lately became Chief [illegible] of the power plant of the Oklahoma Gas & [illegible] Company

[illegible] A. G. who fills the post of Construction Superintendent with the Louisville Gas & Electric Company Louisville, Ky. has been chosen as President of the Engineers and Architects Club of that city

Carmody, M. B. has been appointed assistant receiver [illegible] the Muskogee Petroleum Company, and is located at Tulsa, Okla. Mr. Carmody some time ago was Superintendent of the Southwestern Gas & Electric Company's [illegible] district

[illegible] S. E. has been appointed Sales Manager [illegible] the Guardian Gas Appliance Company, Cleveland

[illegible] Manager of the Shaffer County Gas Company, Drumright, Okla., for the past year, has sold his interests in that corporation and is now Manager of the [illegible] Automobile company in Drumright

[illegible] H. S. who was for some years Secretary of the Southwestern Electrical and Gas Association, Dallas, Texas, is now established as an advisory engineer [illegible] light and power, electrical railways, gas and water works with offices in the same city

[illegible] Eugene, of Calgary, who was elected President [illegible] Volcanic Oil & Gas Company, at the annual meeting [illegible] the concern at Niagara Falls, Ontario

[illegible] H. C. is now Manager of the El Dorado branch [illegible] the Kansas Gas & Electric Company. Mr. Cox formerly was Superintendent of Transmission Lines

[illegible] Clarence L. formerly in charge of the branch of [illegible] Well Supply Company at Coalinga, Cal. is now located at Huntington Beach, Cal. where the company has established an office and warehouse. Mr. Hill is in charge of the new office

[illegible] H. L. of the Union Gas & Electric Company, [illegible] Ohio, has been elected to membership in the [illegible] Chamber of Commerce

[illegible] James recently was appointed to take charge [illegible] the Casper, Wyoming, branch of the National Supply [illegible]

[illegible] H. R. of the Parkersburg Rig & Reel Co. Parkersburg, W. Va., has been [illegible] on an extended trip [illegible] Wyoming in the interests of his company's plants in that state

Mason, H. E. has resigned from his post as Petroleum Economist of the U. S. Bureau of Mines in order to become connected with the American Republican Corporation, New York City

Mayer, George W. has been elected a director of the Standard Oil Company of New Jersey. Mr. Mayer will have charge of the Department of Domestic Sales

Moreheld, I. W. who has been Manager of the Okmulgee, Okla., offices of the Empire Pipe Line Company, has recently been placed in charge of the Gas Department of the Denver Gas & Electric Company

Ogden, F. F. of Buffalo, has been elected Vice President of the Volcanic Oil & Gas Company. The annual meeting of the corporation took place at Niagara Falls, Ontario

Powell, George has been appointed bookkeeper for the Randall Gas Company, Randall, West Va.

Schofield, George recently became Business Manager for the Empire Gas & Pipe Line Company, Topeka, Kan. Mr. Schofield was previously New Business Manager of the Empire Gas & Fuel Company, Bartlesville, Okla.

Shafer, M. R. is now Superintendent of the Oklahoma Division of the Empire Gas & Fuel Company of Bartlesville, Okla. Mr. Shafer was formerly at El Dorado, Kan.

Simmons, L. M. of Clarion, Pa., having completed a period of thirty two years of service with the United Natural Gas Company, recently retired taking his place on the company's pension list. On the occasion of his leaving the company Mr. Simmons' co-workers and associates gave a dinner for him at the Venango Club presenting him with a handsome gift as a remembrance of the long period of their association with him and as a token of the esteem in which he is held

Slade, Theodore of El Dorado, Kan. has been appointed Manager of the Kansas Gas & Electric Company's Wichita branch

Tingley, C. H. formerly Superintendent of the Gas and Electric Department of the Kansas Gas & Electric Company at Wichita, Kan. is now Manager of the company's Arkansas City district

ELECTED

[illegible]

Prudence, like experience, must be paid for.—Sheridan.

ner, president of the First State Bank, Detroit; C. S. Avery, president of Drake Avery Company; J. B. Webbe, Simmons Hardware Company, St. Louis; W. H. Beamer, St. Louis; Judge Jones, St. Louis.

ONTARIO—*Niagara Falls*—At the annual meeting of the Volcanic Oil & Gas Company, officers and directors were elected as follows: President, Eugene Coste, Calgary; vice-president, F. E. Ogden, Buffalo; directors, D. A. Coste, Niagara Falls; C. E. Calvert, Toronto; J. G. Kerr, Chatham.

PER CUBIC FOOT—RATES

ARKANSAS—*Fort Smith*—The Twin City Pipe Line Company is asking permission to charge a higher rate for gas supplied for industrial purposes. The present rates range from 10 to 15 cents per thousand, while the company's petition provides for a flat rate of 15 cents per thousand.

KENTUCKY—*Louisa*—The United Fuel & Gas Company has reduced its rate 0 per cent. in this place as well as in Catlettsburg. The new rate is 32 cents less a discount of 2 per cent.

LOUISIANA—*Shreveport*—The Southwestern Gas & Electric Company has been denied permission by the Public Service Commission to increase its domestic gas rate. The rate at present is 25 cents per thousand. The matter of increase of industrial rate is not as yet settled, and it is reported that there is a possibility that the company may be authorized to increase its rate in this branch of its service.

OHIO—*Lima*—The Lima Natural Gas Company has made effective a new rate schedule as follows: $1.00 per thousand for the first 5,000 cubic feet; $1.05 per thousand for the next 5,000; $1.10 per thousand for the next 5,000 cubic feet, and $1.25 per thousand for all over 15,000 cubic feet. A minimum service charge of $1.25 per month has been established. No discount is allowed. The period set for the schedule is three years.

OKLAHOMA—*Oilton*—The Oilton Gas Company has increased its rates 13 cents per thousand for domestic purposes.

Quapaw—Effective April 1st, the Quapaw Gas Company has adopted the following rates: 35 cents per thousand for domestic purposes; 20 cents per thousand for industrial purposes; 20 cents per thousand for all users of over 500,000 cubic feet per month. This is an increase over the former rates.

PENNSYLVANIA—*Allegheny County*—Permission has been granted the Pennova Natural Gas Company to increase its rates from 50 cents per thousand up to 100,000 and 45 cents per thousand for consumption over that volume, to a flat rate of 53 cents gross per thousand or 50 cents net. A minimum rate of $1.00 per month has been established.

Monaca—An increase in rate from 45 cents to 50 cents per thousand has been announced by the Crescent Gas & Oil Company. The company supplies Colona, Monaca Heights, Wireton, Glenwillard, Sheffield, and South Heights as well as Monaca.

GENERAL

CALIFORNIA—*Huntington Beach*—A branch office and warehouse has been established here by the Oil Well Supply Company of Pittsburgh. Clarence J. Hill formerly of the company's branch at Coalinga, Cal., will be in charge of the new office.

Santa Fe Springs—The Union Oil Company had two gas blowouts in drilling in their No. 1 well on the Alexander property and also in No. 2 well on the Bell ranch. The same difficulty was experienced in the drilling of No. 3 on the Bell ranch.

COLORADO—*White River*—The Rio Blanco Carbon Company, organized recently by Denver interests, is erecting a plant at this point for the manufacture of carbon black. The gas for this purpose will be purchased from the White River Oil Company operating in this district. The officers and directors of the Rio Blanco Carbon Company are: President, Thomas J. Dixon; vice-president, S. R. Robertson; secretary and treasurer, F. M. McMahon; directors, Hon. James F. Garrigues, Hon. Walter Dixon, C. F. Schulte, Fred J. Green.

GEORGIA—*Fort Gaines*—Local engineers are interesting themselves in locating oil and gas on territory along the Chattahoochee River, where it is claimed indications of both products have been found.

INDIANA—*East Chicago*—The Indiana Natural Gas & Oil Company has placed a contract for a 10,000,000-cubic foot gas holder with the Koppers Company. The Riter Conley Company will furnish the holder parts.

KANSAS—*Coffeyville*—The Coffeyville Gas & Fuel Company has completed plans for overhauling its distribution system, making replacements, repairs and additions as required. The sum of $50,000 has been appropriated for the work as laid out.

El Dorado—The Empire Gas & Fuel Company is offering for sale its water system. The price at which the system is in the market is $250,000.

Lawrence—Following a rate controversy in which the Citizens' Light, Heat & Power Company was enjoined from charging above 80 cents per thousand for gas, an action has been filed in the United States District Court by the State, asking that a receiver be appointed for the company. The 80-cent rate was fixed by the industrial court in 1920, and later by the Utilities Commission. The company also established a service charge of 50 cents per month, and it is the service charge which is now being attacked.

Public opinion is democratic.—Holland.

KENTUCKY *Barren County* Howard Harlin has completed a good gasser within the town limits of Glasgow. It is reported that thus far sixteen wells have been drilled in the town and gas is plentiful for all purposes.

Butler County The M. M. Ennis lease situated near here was recently purchased by the Chippewa Oil & Gas Company. Since the acreage changed hands a 50 barrel oil well has been completed in a location made on it by the new owners.

LOUISIANA *Monroe* A recent survey of the Monroe gas field, which comprises Ouachita, Lincoln, Richland, Caldwell, Jackson, Union, Morehouse and Franklin parishes shows 154 wells drilled, with 84 of them producing. The producing wells are located in Ouachita, Morehouse and Union parishes. The survey shows that of the 70 wells drilled in Ouachita Parish 47 are producing while 20 wells turned out dry holes. In Lincoln parish ten wells drilled were all dry holes, the same is the case with ten wells drilled in Richland parish, five wells drilled in Caldwell parish, eight wells drilled in Jackson parish and one well drilled in Franklin parish. In Union parish out of 15 wells drilled seven are producers and eight are dry holes. In Morehouse parish out of 37 wells drilled 30 are producing and seven are dry holes.

MICHIGAN *Manistee* According to report a tract of land near this city is to be tested for oil and gas during the coming spring and summer. J. C. Weaver of Pittsburg has been awarded the contract for drilling ten wells. It is said that a number of years ago oil was found in this neighborhood.

MISSOURI *Kansas City* April 4th to 7th are the dates set aside for a petroleum exposition to be held in this city. J. C. Winters, Chairman, is in charge of arrangements.

MONTANA *Lorraine* The Steller Oil & Gas Company, as it is reported, will drill eleven wells in the Potrero oil field.

NEW JERSEY *Atlantic City* The American Society for Testing Materials will hold its annual meeting here Sept. 1 to July 1st in this city. The Chalfonte Haddon Hall Hotel will be headquarters.

NEW MEXICO *Aztec* The Aztec Oil & Gas Syndicate has completed its second well in this territory and it is a good well at around 8,000,000 cubic feet.

NEW YORK *Buffalo* The natural gas supplied to this city by the Iroquois Natural Gas Company during the winter period been mixed with manufactured gas and the company has by this means been able to greatly improve its service. The mixed gas has given excellent satisfaction.

OKLAHOMA *Bartlesville* The Smelter Gas Company is completing its gas line to the Osage field where a franchise has been taken over by the company to supply the Indian Territory Illuminating Oil Company.

Seminole County The Humble Oil & Refining Company has completed a large gasser in their No. 1 [illegible] the Lester lease, section 15-2-[illegible]

Chandler The Oklahoma Natural Gas Company has lately completed a number of important main extensions in this city.

Drumright The local division employees of the Oklahoma Gas & Electric Company have formed an organization which will be called the "O. G. and E. 100 Per Cent Club," the purpose being entirely social. Employees to become members of the club must be owners of company stock and users of the company's service. Officers elected at the organization meeting are: President, John Larkins; vice president, George Legg; secretary, E. L. Miles; treasurer, Grace Schmutz.

Kingfisher City The Lone Star Gas Company is constructing a 20 inch pipe line from the Eva field to this city.

Garvin County The Wrightsman Oil Company in No. 1 on the Newberry lease, section 14 1n-4w reports a good flow of gas at a depth of 1,331. The Magnolia Petroleum Corporation has a good gas producer in No. 4 Cowan, section 15 1n-2w.

Muskogee County The Ozark Drilling Company in No. 1 on the Smith tract has completed a good gasser at a depth of 2,162-2 feet. The location is in section 21-12-14.

Okmulgee Charles F. Petty, owner of the local ice and electric plants here, has purchased the properties of the Okmulgee Gas Company.

Osage County The Texas Producing Company is reported to have brought in a gasser of large producing capacity in its No. 1 on the Hill tract, section 11-10-11, at a depth of 2,561-2,566 feet.

Osage County In No. 1, section 4-23-9, Peters, Markham and associates have shut in 8,000,000 cubic feet of gas at 2,052-2,155 feet.

Perry The Perry Gas Company has been formed for the purpose of supplying residences with gas for heating and lighting. The company has made a location in section 29-21-2 1w on the Gordon farm northwest of the city and is drilling a test well. The company expects to begin production [illegible] supplying to the city.

Stephens County [illegible] Magnolia [illegible] reports in No. 2 [illegible] contracted for a large gas producer at [illegible] feet.

Wagoner County [illegible] have a good gasser near Coweta in No. 2 on the Town lease [illegible]

Rogers County [illegible] No. 2 [illegible] section 28 1n-18e [illegible] gasser which is estimated to be worth $2,000,000 [illegible] feet.

The Magnolia [illegible] 8,000,000 [illegible] feet [illegible]

[illegible] 8,000,000 [illegible] gasser [illegible] No. 1 on the Lowery tract [illegible]

Ill-will and blind prejudice are the best defence of actual power and exclusive advantages.—Hazlitt

section 3-17-16. No. 2 well drilled by the same interests on the same lease is also a good gasser at around 600 feet.

Wann—The properties of the Quapaw Gas Company in this city and in Copan, including pipe lines, have been purchased by W. L. Cushenbury and G. F. Boswell.

PENNSYLVANIA—*Clarion County*—A large gas well has been completed in the Pine Hollow field, located in this county. It is claimed that the well is good for 12,000,000 cubic feet per day.

Greene County—In Bristol district, the People's Natural Gas Company has completed a gasser on the J. L. Garrison farm.

In Gilmore township, the People's Natural Gas Company's test on the S. W. Gilmore farm is a gasser. In Morris township, the Wheeling Producing Sompany's No. 3 on the D. K. Phillips farm is a small gasser in the Big Injun sand.

The Manufacturers Light & Heat Company has a fifth sand gasser at a test on the H. C. Rizer farm, in Aleppo township. In Jackson township, the same company has a gasser in the Big Injun sand at a test on the Edward Huffman farm.

TENNESSEE—*Robinson County*—The Sewanee Oil & Gas Company in No. 1, in District 4, has a gasser at a depth of 685 feet.

TEXAS—*Bayou*—No. 1 well of the Gulf Company on the Luce property, to the east of the city, came in at a depth of 2,840 feet with a strong pressure of gas that wrecked the derrick.

Comanche—A contract between the Comanche Gas Company and W. R. Caldwell under which the company is to receive a certain supply of gas from wells drilled by Mr. Caldwell in this territory, has been approved by the authorities. The gas supplied by Mr. Caldwell is distributed in this city by the Comanche Company.

Millsap—Jackson & Cathart are reported to have completed a good gasser near Millsap at a depth of 690 feet.

Panhandle—It is reported that the Gulf Production Company has brought in a very large gasser in a well located near this place.

San Antonio—The Southwestern Electrical and Gas Association will hold its annual meeting in this city May 3d to 6th, inclusive.

WEST VIRGINIA—*Boone County*—On Coal River, Petonia district, the Owens Bottle & Machine Company has a good gasser in its test on the Broun heirs farm. The gas was found in the Berea grit.

Braxton County—In Salt Lick district the Cumberland Oil & Gas Company has a gasser in the stray sand at its No. 7 on the Guy Edwards' farm.

Cabell County—On the waters of Fudges Creek, in Grant district, the Empire Petroleum Company have completed the No. 1 well, Elijah Chapman farm, through the Berea sand, and have a 250,000 foot gasser.

Calhoun County—In Sherman district the Hope Natural Gas Company has drilled its test on the W. T. Wiant farm. It is a fair gasser.

In Center District, James W. Yoke in No. 1 on the Bickel Bros. land completed a 1,000,000-cubic foot gas well at a depth of 1,900 feet.

In Center District, the Chemical Oil Company has a salt sand gasser at No. 19 on the Bennett heirs' farm.

Charleston—The Vickers Oil & Gas Company has been granted permission to increase its capital from $50,000 to $75,000.

Doddridge County—In New Milton district, Trainer & Travis have a Big Injun sand gasser at No. 3 on the Lewis Maxwell farm.

In the Central district, located on Cabin Creek, the McCall Oil Company"s test on the Mary A. Bee heirs' farm is a gasser in the Big Injun sand.

In Southwest district, E. S. Daubenspeck & Co. have completed a Big Injun sand gasser at a test on the W. R. Brown farm.

Gilmer County—In Center district, the Smokeless-Peerless Carbon Company has a salt sand gasser at a test on the Nora V. Roberts farm.

On Bear Fork of Cove Creek, Troy district, the Hope Natural Gas Company developed a fair gas pressure in the Big Injun sand at a test on the W. W. Elmer farm.

Harrison County—The Grasselli Chemical Company's second test on the E. M. Copring farm, located in Simpson district, is a gasser in the fifth sand.

Lincoln County—In Carroll district, the Huntington Development & Gas Company encountered a fair gas pressure in the Big Lime formation at a test on the Walter Porter farm.

Marshall County—In Liberty district, the Manufacturers Light & Heat Company has a small gasser in the Gordon sand at a test on the M. B. Shenffield farm.

Pleasants County—On Crooked Run, McKim district, Bringheimer & Company have completed their test on the Campbell estate. It is a gasser with a capacity of 1,000,000 cubic feet a day.

Putnam County—In Curry district, the Sovereign Gas Company has completed a test on the Henry E. Lawson farm. It is a gasser in the Berea grit.

Ritchie County—In Murphy district, the same company has a salt sand gasser at a test on the John W. Barton farm. In the same district, the same company's test on the W. V. Gill farm is a gasser in the Maxon sand.

In Union district, the Hope Natural Gas Company got gas in the same formation at a test on the Elizabeth Ferrell farm.

On Bone Creek, Union district, the Hope Natural Gas Company's test on the Amos Huff farm is a light gasser

Even the burglar isn't satisfied to take things as they come. He goes after them.

Building Prospects

IN view of the fact that the building of houses means in the vast majority of cases a need for gas ranges, for water heaters and other domestic gas appliances, and since the building of many industrial plants means much industrial gas equipment, it is quite in keeping that we should recount the findings of the National Bank of Commerce of New York. In a report from this institution received at our editorial department, the following statement is made:

"The present activity in building operations is an outstanding feature of the general business situation. The building industry in the United States is second in importance only to agriculture and many million workmen directly and indirectly are dependent upon it. In the more active building sections of the country that are systematically reported, comprising about half the states, considerably more than two billion dollars in contracts were awarded last year.

In the first ten weeks of 1922 the value of contracts let for building and construction, including public works, in the twenty-five states north of the Ohio river and east of the Missouri, as reported by the F. W. Dodge Company, was $427,-267,000 compared with $280,841,000 for the corresponding period of 1921. March is regarded as the crucial month by which the building outlook is to be judged. Contracts for the two weeks from February 24 to March 10 for the indicated territory were $118,121,000 compared with $66,264,000 in 1921. Bradstreet's report on building permits shows a total of $263,303,000 for January and February, compared with $133,516,000 for these months in 1921."

The foregoing figures show decided activity and have great significance in view of the fact that building costs are as yet out of all proportion to costs in other lines. With the conditions as they exist fully in mind, we see great encouragement.

In fact, on every hand, throughout a lengthy recent trip, the writer met with not the doleful face and the complaining individual, but hosts of not simply hopeful but bright and cheerful individuals, made such by the betterment of conditions already within their reach.

The statement is made that plenty of capital is in sight for 1922 in the Natural Gas and Oil Fields, thus ensuring ample development, as likewise there is quite sufficient money available to manufactured gas companies to make possible large improvements and the extension of lines.

Manufacturers of equipment, appliances and supplies for the utilization of gas show great activity, and we are told by equipment manufacturers that there is plenty of business, but what they need most of all at present is a stabilized market.

Advertisers are feeling the uplift and are taking larger and additional space in order to again constantly keep themselves in print before the eyes of the prospective buyer.

It is certainly a pleasure to rehearse to our readers the present findings on the part of large and dependable institutions, and we do so with the expectation that even with the coal strikes and other disturbances, we shall not be set back to any appreciable extent, instead, we are on the move, and we shall keep pushing forward full of the vigor that comes with the new awakening of better conditions.

Lucius S. Bigelow

THE NATURAL

GAS INDUSTRY

TRANSPORTATION GASOLINE PRODUCTION DISTRIBUTION

SUBSCRIPTION— IN THE U. S.

VOLUME 16
THIS NUMBER 4

CONTENTS FOR APRIL, 1922

PUBLISHER'S NOTICE

PUBLISHED MONTHLY

Advertising Copy should be in by the 5th of each previous to issue.

SUBSCRIPTION RATES In the United States [illegible] Foreign countries [illegible] Canada [illegible]

ADVERTISING RATES on request

CORRESPONDENCE IS SOLICITED from all those interested in Natural Gas and related industries

Bell Long Distance (Day) Bell Telephone, [illegible]

Cable Address "Publight, Buffalo"

Address General Correspondence, Editorial and Advertising Matter to Central Office

PUBLISHED BY
PUBLIC LIGHT PUBLISHING CO.,
BUFFALO, N.Y.

[illegible] B. Bradley, *President and Editor*
Hugh B. Bradley, *Vice President*
A. Louis Bradley, *Secretary*

Entered as second class matter December 1, [illegible] at the Post Office at Buffalo, New York, under the act of March 3, 1879

CONTENTS OF THIS ISSUE

INDEX OF PAST 1922 ISSUES

MEMBERS OF ASSOCIATION OF NATURAL GAS SUPPLY MEN

ASSOCIATION OFFICES

905 Oliver Building, Pittsburgh, Pa.

DIRECTORS

FRED A. MILLER	F. R. HUTCHINSON
T. C. CLIFFORD	A. W. THOMPSON
L. A. ADAMS	WM. PATTERSON
O. F. FELIX	R. A. McKINNEY
W. B. GLOVER	F. W. MINER
WM. B. WAY	B. T. BECHTEL
E. S. ROONEY	GEO. D. ROPER

Acme Fishing Tool Company, Parkersburg, West Va.
Ajax Iron Works, Corry, Pa.
American Atmos Corporation, Pittsburgh.
American Cast Iron Pipe Co., Chicago.
American Foundry Construction Co., Pittsburgh, Pa.
American Heater Corp., St. Louis.
Anchor Packing Co., Pittsburgh.

Bailey Meter Co., Cleveland.
Baltimore Gas Appliance & Mfg. Co., Baltimore.
Bartlesville Supply Co., Bartlesville, Okla.
Bessemer Gas Engine Co., Grove, City, Pa.
Black Steel & Wire Co., Pittsburgh, Pa.
Borden Company, Warren, Ohio.
Bovaird & Seyfang Mfg. Co., Bradford, Pa.
Bradford Motor Works, Bradford, Pa.
Bristol Co., Waterbury, Conn.
Broderick & Bascom Rope Co., St. Louis.
Bryant Heater & Mfg. Co., Cleveland.
Builders Iron Fdy., Providence.
Byers, A. M. Co., Pittsburgh.

la.

, W.Va.

o., Co-

lwaukee

Dayton Pipe Coupling Co., Dayton.
Davison, N. C., Gas Burner & Weld'g Co., Pittsburgh.
Doherty & Co., Henry L., New York.
Dresser, S. R., Mfg. Co., Bradford, Pa.
Duquesne Burner Service Co., Pittsburgh.

Eclipse Gas Stove Co., Rockford, Ill.
Economy Stove Co., Cleveland, O.
Economy Burner & Engineering Co., Pittsburgh
Equitable Meter Co., Pittsburgh.
Erie, Stove & Mfg. Co., Erie, Pa.
Estate Stove Co., Hamilton, O.

Fenwick-Reddaway Mfg. Co., Newark, N. J
Fitler, Edwin H. Co., Philadelphia, Pa.
Foxboro Co., The, Foxboro, Mass.
Franklin Co., The, Massillon, Ohio.

Frick & Lindsay Co., Pittsburgh.

Garlock Packing Co., Palmyra, N. Y.
Gas Age, The, New York City.
Gas Appliance Co., Cleveland.
Gas Engineering & Const. Co., Pittsburgh.
Gas Record, Chicago.
General Gas Light Co., Kalamazoo.
Germer Stove Co., Erie.
Gilfillan Machine Works, Ebenezer, N. Y.
Goodrich, B. F. Co., Akron, O.
J. H. Grayson Mfg. Co., Athens, Ohio.
Grinnell Co., Providence, R. I.

burgh.

Inc., Butler, Pa.
rgh.
ain, O.
r Co., Pittsburgh.
terica, Wellsville,

nazoo, Mich.

Imperial Belting Co., Chicago, Ill.
Ingersoll Rand Co., Pittsburgh.
International Hale Gas Mixer Company, Chicago, Ill
International Tank & Mfg. Co., Parkersburg, West Va.

Jarecki Mfg. Co., Erie.
Jones & Laughlin Steel Co., Pittsburg, Pa.

Kisselman & Co., Parkersburg, West Va.
Koppers Co., Pittsburgh, Pa.

LaBelle Iron Works, Steubenville, O.
Larco Wrench & Mfg. Co., Chicago.
Lattimer-Stevens Co., Columbus, O.
Leschen, A. & Sons Rope Co., St. Louis.
Lucey Mfg. Corp., Pittsburgh.
Ludlow Valve Mfg. Co., Pittsburgh.
Lunkenheimer Company, Cincinnati, Ohio

MacWhyte Co., Pittsburgh.
Manhattan Rubber Mfg. Co., Passaic, N. J.
Manley & Barlow Co., Corry, Pa.
Maxon Premix Burner Co., Muncie, Ind.
McKain, J. B., Fishing Tool Co., Parkersburg, W. Va.
Metric Metal Works, Erie.
Minneapolis Heat Reg. Co., Minneapolis.
Moon Mfg. Co., The, Chicago.
Moore, Lee C. & Co., Inc., Pittsburgh.
Moser Mfg. Co., Kane, Pa.
Mueller H. Mfg. Co., Decatur, Ill.

National Supply Co., Pittsburgh.
National Transit Pump & Mach. Co., Oil City, Pa.
National Tube Co., Pittsburgh.
Natural Gas Industry, Buffalo.
New Bedford Cordage Co., New York City.
New York Belt'g & Pack'g Co., New York.
Northrup Equipment Co., Parkersburg, West Va.

Ohio State Stove Co., Columbus, O.
Oil & Gas Journal, Tulsa, Okla.
Oil City Boiler Wks., Oil City, Pa.
Oil Trade Journal, New York.

Oil Well Supply Co., Pittsburgh.
Oxweld Acetylene Co., Chicago.

Parkersburg Mach. Co., Parkersburg, W.Va.
Parkersburg Rig & Reel Co., Parkersburg, W. Va.
Peerless Heater Co., Pittsburgh.
Pennsylvania Furnace & Stove Co., Warren, Pa.
Petroleum Publishing Co., Tulsa, Okla.
Petroleum Supply Co., Steubenville, O.
Pittsburgh Meter Co., East Pittsburgh.
Pittsburgh Reinforced Brazing & Mach. Co., Pittsburgh.
Pittsburgh Supply Co., Pittsburgh.
Pittsburgh Valve & Fittings Co., Pittsburgh.
Pittsburgh Valve, F'd'y & Const. Co., Pittsburgh.
Pittsburgh Water Heater Co., Pittsburgh, Pa.
Plymouth Cordage Co., N. Plymouth, Mass.
Pratt & Cady Co., Inc., Hartford, Conn.
Precision Instrument Co., Newark, N. J.
Prichard Supply Co., Mannington, W. Va.

Rathbun-Jones Eng. Co., Toledo.
Reading Iron Works, Reading, Pa.
Reid, Jos., Gas Engine Co., Oil City, Pa.
Rensselaer Valve Co., Pittsburgh, Pa.
Reliable Stove Co., Cleveland.
Republic Iron & Steel Co., Youngstown, O
Republic Rubber Co., Youngstown, Ohio.
Republic Supply Co., Houston, Tex.
Reznor Mfg. Co., Mercer, Pa.
Riesenman Mfg. Co., Ltd., Franklin, Pa.
Robinson Packer Co., Tulsa, Okla.
Roebling, John A. Sons Co., Trenton, N. J.
Geo. D. Roper Corp., Rockford, Ill.
Rossendale-Reddaway Belt'g & Hose Co., Newark, N. J.
Ruud Mfg. Co., Pittsburgh.

Safety Gas Stove Lock Co., Nashville, Tenn.
Sands Mfg. Co., Cleveland.
Sanitary Co. of America, Linfield, Pa.
Schaeffer & urgh.
Selas Co.,
South Ches
Spang, Cha
Sprague M
Stacey Mfg
Steele & T
Stitt Ignitl
Stokes Dee
Strause Ga
Superior O
Symmonds,

Taylor, W. P. Co., Buffalo.
Toledo Pipe Thr'd'g Mach. Co., Toledo, O.

Union Rubber & Asbestos Co., Trenton, N. J.
United Seal Co., Columbus.
Upson-Walton Co., Cleveland, O.
U. S. Rubber Co., New York.

Walker & Pratt Mfg. Co., Boston, Mass.
Welsbach Co., Gloucester City, N. J.
Westcott Valve Co., Seneca Falls, N. Y.
Western Gas Construction Co., Fort Wayne, Ind.
Westinghouse Electric & Mfg. Co, Lester, Pa.
Wheeling Steel & Iron Co., Wheeling.
Williamsport Wire Rope Co., Williamsport, Pa.
Worthington Pump & Mach. Corp., Buffalo.

York Derrick Co., Washington, Pa.
Youngstown Sheet & Tube Co., Youngstown, O.

ANNUAL CONVENTION NATURAL GAS ASSOCIATION OF AMERICA
and EXHIBITION OF SUPPLY MEN'S ASSOCIATION
Kansas City, Kan., May 15-17, 1922

FROM THE EDITORIAL MAIL BAG

[illegible]OIDING TRADE-NAME MENTION

[illegible]N reading an address made by a gas man at a rather recent gas convention, we were [illegible] fact that the writer of the address had mentioned one particular make of [illegible] several times and one or two other gas [illegible] trade name as well. This happening [illegible] one of the hard and fast rules formu[illegible] the very first meeting of the National Com[illegible] Gas Association was back in 1908, and strictly [illegible] during the early years of that association [illegible] believe throughout the entire period of the [illegible] operations.

[illegible] set down that no trade appliance should [illegible] either by trade name, or name of maker [illegible] entirely satisfactory to all of the manu[illegible] It was satisfactory to the gas men, and [illegible] made a law of the association.

[illegible] back [illegible] to a meeting of the N. C. [illegible] the Hotel Cadillac in New York, afterward [illegible] Wa[illegible]ick, the Cadillac having been the [illegible] of the N. C. G. A. The publisher of the [illegible]DUSTRY Magazine was in those times Secre[illegible] the N. C. G. A. and the developing of the asso[illegible] print is concerned was through [illegible] columns of his magazine. A man con[illegible] the Atlanta Gas Light Company of At[illegible] who was exceedingly active in Com[illegible] during those years of the N. C. G. A., [illegible] Rushin, realizing how much had been [illegible] the association and for the industry at large [illegible] the manufacturers of gas appliances [illegible] columns of the GAS INDUSTRY maga[illegible] magazine in the field that stood for [illegible] development in the industry and [illegible] association functioning nationally [illegible] opportunity in one of the general sessions to [illegible] directing attention to the splendid work [illegible] Association and the [illegible] magazine using its name at the outset [illegible] Immediately the publisher who was [illegible] his feet and said: "Though our [illegible] I desire to assume the [illegible] to call the gentle[illegible] hard and fast rule of the asso[illegible] trade [illegible] be mentioned in any [illegible] the organization [illegible] the name of a trade [illegible] comes under the [illegible] the trade name of an ap[illegible] Mr. Rushin [illegible] feeling that under [illegible] were entirely different, but the secretary would not be dissuaded from the stand he had taken and requested that what Mr. Rushin had thus far said should be stricken from the minutes, in justice to other interests in the field and in order not to establish a precedent adverse to the rule.

Would it not be [illegible] field to adopt [illegible] dation of the N. C. G. A. [illegible] mentioning of appliances [illegible] turers by concern name.

KANSAS CITY HOTELS

THE [illegible] Kansas City [illegible] who will [illegible] vention in May.

Baltimore
12th and Baltimore

Bray
12th and Baltimore

Coates House
10th and Broadway

[illegible]
12th and [illegible]

[illegible]
12th and [illegible]

[illegible]
312 East 9th

[illegible]
12th and Baltimore

Kupper
11th and McGee

Mercer
12th and McGee

[illegible]
9th and [illegible]

[illegible]
12th and [illegible]

[illegible]
12th and W[illegible]

[illegible]
[illegible] and [illegible]

[illegible]
[illegible]

[illegible]
[illegible] and [illegible]

[illegible]
[illegible]

[illegible]
[illegible] and M[illegible]

[illegible]
12th and [illegible]

[illegible]
[illegible] and M[illegible]

Order is man's greatest need, and his true well-being.—Amiel.

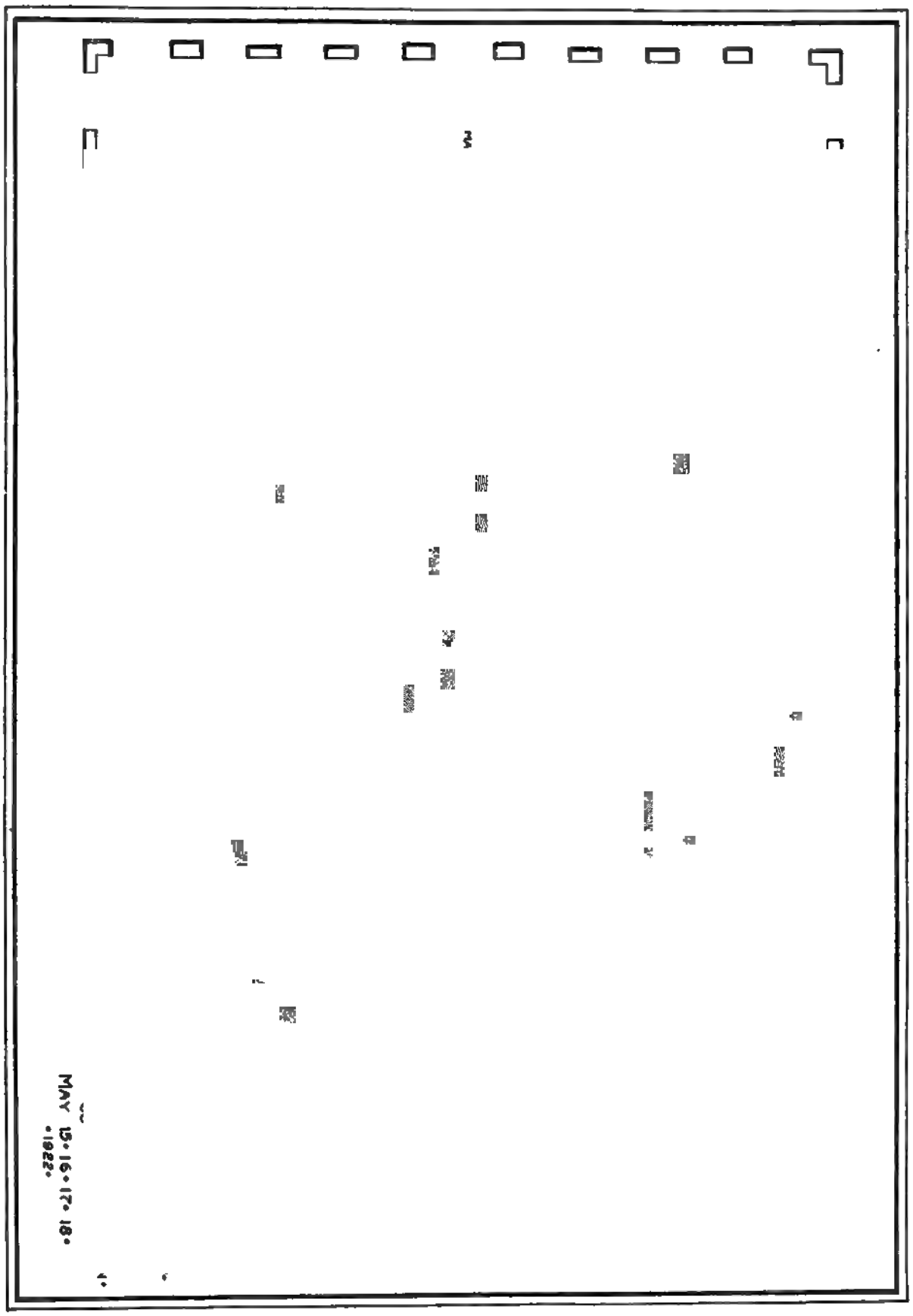

People would meet with fewer disappointments if they didn't expect more than they deserve

Natural Gas Convention

Plans for Great Kansas City Event Being Rapidly Completed

Large Attendance Assured

[illegible] at Kansas City are progressing excellently well. The manufacturing concerns of the field are responding favorably to the invitations sent out from the association headquarters in Pittsburgh, thus ensuring an exhibition of high order. In our former number we told of the fact that the main exhibition room is oval in form. We mentioned the west and east arcades where [illegible] the seats of the main auditorium an excellent [illegible] made possible in which to display various of [illegible] that will be shown.

[illegible] will be four main aisles passing through the [illegible] auditorium with a cross aisle at the north and [illegible] ends of the rows of exhibition spaces scheduled [illegible] main section.

[illegible] central row of spaces down the middle of the auditorium are twenty three in number. These are [illegible] by ten feet, while those in the two rows to the [illegible] and left of this centre panel form a total of [illegible] which are ten by twenty feet in area. There [illegible] booths ten by fifteen feet, others nine feet [illegible] by ten feet deep, others ten and a half by [illegible] feet etc., etc., while there are four large booths [illegible] each five hundred eighty square feet and two [illegible] forty four square feet each. The rules gov[illegible] the exhibits are in general much like those in [illegible] former Natural Gas Conventions.

[illegible] being a member of the association of Natural Gas Supply Men is entitled to one badge, all extra [illegible] at three dollars each. These badges will permit [illegible] three noon day luncheons that are served by the [illegible] of the associations of Natural Gas Supply Men having badges.

[illegible] exhibits in the center portion of the Exhibition Hall [illegible] allowed over a height of six feet, and it is stated [illegible] rear of each booth must not be arranged in a [illegible] offset from the abutting booth. Wall spaces [illegible] for those who desire backgrounds and who [illegible] exhibits.

[illegible] patters as we noted in our former [illegible] were well thought out by the President, Mr. [illegible] of Pittsburgh, and arrangements are under [illegible] will make for a very instructive and inter[illegible] exhibition.

[illegible] the east that it knows [illegible] the eastern interests up their hat [illegible] and the eastern interests are not going to [illegible] the west [illegible] than the east. That is to say the east and the west are going to harmonize in so excellent a fashion as to have no marked line of cleavage between the two. There shall be no factions, says President Denning.

One of the very important factors in connection with the annual work of the association is the gathering of Wrinkles, the valuable means of transmitting from one to another discovered short cuts, easier and better ways of doing things.

The men of the industry have been liberal in the providing of Wrinkles at former convention seasons and it is to be hoped, indeed it is expected, that the harvest of Wrinkles in 1922 will be larger than in any of the preceding years.

Hotel reservations should be made without delay since the attendance will be large, and it is difficult for hotel management to make provision for special occasions, and yet take care of regular hotel customers unless needs are expressed much in advance of the time of meeting.

The Natural Gas Industry Magazine feels that same keen interest in the success of this western meeting that might be expected of a publication the owners and publishers of which have attended every meeting of the association since its very beginning, the meetings in both the west and the east.

For years no magazine other than the Natural Gas Industry Magazine upheld the hands of the association, told its story in advance of its meetings, urged large attendance, told of the exhibits that would be shown and afterward gave the industry a clear [illegible] and excellent idea of the proceedings and what transpired.

It should not be overlooked that [illegible] the Natural Gas Industry Magazine [illegible] for its share in the upbuilding of the organization and the success of its work. For years the [illegible] and this magazine [illegible] and for years [illegible] officially [illegible] Natural Gas Association of America.

Attend the [illegible] at Kansas City, May [illegible] 17 and 18, the 12th annual meeting [illegible] are pleasant [illegible]

The [illegible] exhibitors [illegible]

Bailey Meter [illegible]

Bessemer Gas Engine [illegible]

Black Sivalls & Bryson, Inc., [illegible]

Nothing is more unjust or capricious than public opinion.—Hazlitt.

Borden Company, Warren, Ohio.
Bovaird & Seyfang Mfg. Co., Bradford, Pa.
Bridgeport Machine Co., Augusta, Kansas.
The Bristol Company, Waterbury, Conn.
Bryant Heater & Mfg. Co., Cleveland.
Chaplin-Fulton Mfg. Co., Pittsburgh, Pa.
Cleveland Gas Meter Co., Cleveland.
Continental Supply Co., St. Louis.
C. and G. Cooper Co., Mt. Vernon, Ohio.
Wm. M. Crane Co., New York
The Becker Company, Newark, Ohio.
Henry L. Doherty Co., New York.
S. R. Dresser Mfg. Co., Bradford, Pa.
Equitable Meter Co., Pittsburgh.
Estate Stove Company, Hamilton, Ohio.
The Foxboro Company, Foxboro, Mass.
Frick & Lindsay Co., Pittsburgh.
General Gas Light Co., Kalamazoo, Mich.
Gilfillan Machine Co., Ebenezer, N. Y.
C. M. Heeter Sons & Co., Inc., Butler, Pa.
Hewitt Rubber Company, Pittsburgh.
Hope Engineering & Supply Co., Pittsburgh.
Imperial Belting Co., Chicago.
Jarecki Manufacturing Co., Pittsburgh.
Jones & Laughlin Steel Co., Pittsburgh.
Kansas City Gas Co., Kansas City.
Koppers Company, Pittsburgh.
A. Leschen & Sons Rope Co., St. Louis.
Ludlow Valve Mfg. Co., Troy, N. Y.
Lunkenheimer Company, Cincinnati
Mark Mfg. Company, Chicago.
S. M. Jones Company, Toledo.
Metric Metal Works, Erie.
Lee C. Moore & Co., Inc, Pittsburgh.
H. Mueller Mfg. Co., Decatur, Ill.
National Supply Company, Toledo.
National Tube Co., Pittsburgh.
Oil Well Supply Company, Pittsburgh.
Parkersburg Rig & Reel Co., Parkersburg.
Pittsburgh Meter Co., East Pittsburgh.
Plymouth Cordage Co., North Plymouth, Mass.
Republic Iron & Steel Co., Youngstown, Ohio.
Reznor Mfg. Company, Mercer, Pa.
Robinson Packer Co., Tulsa, Okla.
George D. Roper Corp., Rockford, Ill.
Ruud Mfg. Co., Pittsburgh.
Sprague Meter Co., Bridgeport, Conn.
Superior Tube Co., Kansas City, Mo.
United States Rubber Co., Pittsburgh.
Welsbach Company, Gloucester City, N. J.
Wico Electric Company, Springfield, Mass.
Scott Gas Appliance Co., Baltimore.
Westinghouse Elec. & Mfg. Co., East Pittsburgh.

MEASURING OF ADVERTISING VALUE.

WE frequently hear the words "repeat orders." We know that manufacturers look upon customers who are of the "repeat order" class as a real asset, versus the more expensive type of customer who is brought to the point of buying, but who does not buy again.

When a manufacturer advertises, he, in many cases, attempts to measure the value of his publicity by the number of orders he can trace directly to a certain advertisement, "keyed" or not "keyed," forgetting that even the personal element that makes a salesman's services valuable to the tune of high salary, fails in many, many instances to bring results that are tangible, until he has called again, and again and yet again upon his prospect.

When a manufacturer measures the value of his advertising and the value of his representatives visiting of the trade, there must be an entirely different standard adopted, if real value is to be determined. It must be, "results in the long run."

We have known many a salesman who has made his best permanent customers out of prospects whom he purposely did not at first or upon a second, or upon still additional calls even seek to secure "on the dotted line."

The salesman who is keen and observing knows that often the abruptly made customer is not the customer of long standing, and so is it with customers made through advertising. It is a building process, a gradual weaving into the mesh of the prospects' needs, the feeling that he would miss it if the salesman's call were discontinued or the advertisement ceased to appear.

When an impression is so strongly seated with a prospect, that he would really miss the call or the advertisement, the relationship between representative and prospect, and between advertisement and prospect has become so close that without feeling the jar that comes with undue anxiety and undue urging, the prospect becomes a permanent customer.

We would not wish to be misunderstood as indicating that the signature on the dotted line at the time of an early call, and the immediate response to an advertisement are necessarily not of advantage, but they are best assets, most permanent assets, that come voluntarily and not through the force of true argument. *"Keeping everlastingly at it brings success."*

A bad man's credit is as shifty as himself.—Pliny.

Life of Gas Meter Service

The Subject of Old Age Meter Changes is Ably Discussed With Accompanying Tabular Records

By C. R. MILLER
Superintendent Collections, Portland Gas & Coke Co.
Portland, Ore.

will be my point to show that, so far as the experience of the Portland Gas & Coke Company indicates, there appears to be no necessary relationship between the accuracy of a gas meter period in service

question of accurate registration in connection regulations has heretofore been closely asso- th the length of time that the gas meter has been rvice

certain rules have been established, designed meters from service after a certain period of he general practice differs in the various local apparently is based on general experience rather entific analysis of the conditions

the general tendency of gas meters is to run consumer would generally speaking, appear to advantage except in isolated instances. Under conditions therefore, from a consumer's stand re appears to be no necessity for regulations the period of service and automatically retiring r for repairs

e other hand, the problem of old age meter from the gas company's standpoint, not only losses in revenue through slow or D. R. meters resents the largest single item of expense in con with meter traffic from an operating cost stand-

regulations governing meter changes for old age rmewhat with different states in the Union in ce with the following tabulation. It will be wever that the majority of States provide for ical test every five years

Service Allowed		STATES	Service Allowed
	7 Years	North Carolina	5
		North Dakota	5
	7	Oregon	5
	6	Pennsylvania	5
	6	Washington	5
	5	West Virginia	5
	5	Wisconsin	4
		Arizona	1
	5	Nevada	1
	5	New York	
	5	Second District	Service
	5	New Hampshire	5 Years
	5		

It is the writer's contention that none of the above regulations are based upon a scientific consideration of the subject and that the period after which meters should be changed depends entirely upon local circumstances which should be examined into in the case of each utility.

In view of the large annual expense in connection with the retirement of old age gas meters, there would appear to be, in an arbitrary regulation of the period a great liability to unnecessarily expend a large sum of money in operation, without particular benefit either to the con- sumer or the company.

We will attempt in this paper to analyze the problem with respect to meter conditions of the Portland Gas & Coke Company, not with the idea that the conclusions will necessarily apply to all utilities so far as the exact period at which meters should be changed is concerned, but rather by way of illustrating that there does not exist any necessary relationship between the period of service and the correct registration of a meter.

For the purpose of determining how long a meter could remain in service without the need of mechanical adjustment or repairs or undue loss from a registration standpoint, records of the Portland Gas & Coke Com- pany were examined on all meters removed from con- sumers' premises during the 22 consecutive months immediately preceding December 1916, as shown in the following tabulation.

TABLE No. 1

Average per cent fast or slow Meters January, 1915 to November 1916 Showing Repaired Meters for 22 Consecutive Months and Different Ages

Years	0	1	2	3	4	5	6
See Note*	[illegible]	[illegible]	[illegible]	[illegible]	[illegible]	1.41	1.[illegible]

Years	7	8	[illegible]	10	[illegible]	[illegible]	Years Ave.	Wtd Ave.	Product of Ave. Months
See Note*	1.[illegible]	[illegible]	1.[illegible]	[illegible]	[illegible]	[illegible]	[illegible]	[illegible]	[illegible]

*Note. In this connection 1,164 meters of all ages were tabulated but in order to avoid [illegible] between [illegible] makes of meters [illegible] meters or [illegible] of the total were [illegible] considered. The same will apply in regard to [illegible] the ages [illegible] in this article.

In order to [illegible] a similar analysis was made for 1915 and 1916 covering the removal from service of 17,[illegible] Maryland meters which had been

in service for periods ranging from a part of one year to as long as 13 years. This tabulation is given below:

TABLE NO. 2

AN ANALYSIS OF MONTHLY METER TEST RESPORTS FOR 1919—1920.

Per Cent Fast or Slow for Different Years of Service.

Meter Years	0	1	2	3	4	5
Number of Meters	3111:	3507:	2260:	2178:	1484:	1172:
Per Cent Fast or Slow	—.70	—.39	—.04	+.07	—.13	—1.25

Meter Years	6	7	8	9	10	11
Number of Meters	846:	729:	1670:	443:	267:	27:
Per Cent Fast or Slow	—.34	—.35	—.89	—1.35	—4.20	—1.00

Meter Years	12	13	Wtd. Ave. % Slow	Tot. No. Meters	% of Total
Number of Meters	6:	2:		17704:	81.2
Per Cent Fast or Slow	—.29	—1.30	—.54		

Remarks: Figures 6-13 inclusive indicate the number of years the meters represented had been in service.

A notation of (—) minus, means slow; of (+) the % fast.

All figures are on a basis of 1%; for example—11.50, means eleven and one-half % slow.

All meters herein considered have been tested at six times their rated light capacity, and computations based upon such test results with the exception of those proving slow in excess of 50% which were considered D. R., or 100% slow.

It will be noticed that both tabulations reveal about the same situation.

An examination of the tabulations shown does not reveal any progressive relationship indicating that the meters become more or less accurate the longer they have been in service. In neither tabulation is the year of maximum inaccuracy the same.

On the other hand, if we exclude the D. R. meters, the comparison becomes still more striking, and it is evident that the greater inaccuracy, if any, on account of the terms of service, is greatly influenced by the number of D. R. meters which are excluded in the following tabulation:

TABLE NO. 3

ANALYSIS OF MONTHLY METER TEST RECORDS FOR 1919 AND 1920, EXCLUDING ALL D. R. METERS.

Per Cent Fast or Slow for Different Years of Service.

Years Service	0	1	2	3	4	5	6
Total Number Meters	3111	3507	2260	2178	1484	1172	848
% + or —.							
No. D. R.	32	30	15	9	9	16	18
Excl. D. R.	+.36	+.56	+.62	+.48	+.48	+.13	+1.28

Years Service	7	8	9	10	11	12	13
Total Number Meters	729	1570	443	267	27	6	2
Incl. D. R.	—.33	—.89	—1.35	—4.20	—1.00		
% + or —.						—.29	—1.30
No. D. R.	4	13	2	6	1		
Excl. D. R.	+.32	—.11	—.90	—1.95	+.270	—.29	—1.30

The statement may hence be made that so far as the records of the Portland Gas & Coke Company would indicate, a meter does not progressively become less accurate due to the length of time in service. It may be stated as a logical deduction that this will be true of a similar type of meter no matter where installed, under similar conditions, and we may hence draw the final conclusion that any system of regulation based upon the assumption that meters necessarily become more inaccurate the longer they are in service, is based upon faulty premises.

It is seen, therefore, that any regulation that may be established for the removal of meters due to old age should be established entirely upon an examination of the records of that particular utility and the conditions under which these meters must operate.

To illustrate, the lack of reason in such regulations as now in effect let us consider human beings instead of gas meters. Should we find upon examination of insurance or other statistics that a certain number of human beings at a certain age become diseased in a certain way, are we justified in sending all human beings to a hospital for the treatment of such a disease at the end of the indicated period?

On the other hand, is it not much more logical to send a human being to the hospital when symptoms appear? Even if we should establish similar regulations for human beings as for gas meters, should we not take into consideration, in establishing such regulations, the local health conditions to which the individual is subjected to?

The study of averages is a very misleading study. An average condition may be produced either by slight imperfections in many units or by large imperfections in a few units. If it can be scientifically shown in the case of gas meters that condition of inaccuracy is produced by the imperfection of a few meters than it would seem more logical to attack the problem of securing a correct registration by some other means than by a wholesale removal of meters.

When the gas man succeeds in collecting and presenting the truth of such a condition and he is able to recommend a selective method of meter changes, there is no question in the author's mind but that the various regulatory bodies will willingly amend their rulings accordingly.

It is the author's belief that much of the remedy will be found in prevention rather than cure, and that the life of meters in service can be greatly prolonged by proper attention to the various conditions under which they must operate.

The location of a gas meter with respect to its susceptibility to mechanical injury, temperature variations, condensation, etc., has a varying effect upon the operation, registration and length of its useful service. For

Power is with a good deal of accuracy measured by purpose.—Parkhurst.

purpose of substantiating this contention, 807 meter tions were inspected and a record made of the con- ns under which each meter was operating. The rs were then immediately removed and tested, and result the following recapitulation is set forth:

TABLE NO. 4

EFFECT OF A METER'S LOCATION UPON ITS ACCURACY.

	Meters in Basement	Meters Outside	Liability to Temp. Variation: Basement	Liability to Temp. Variation: Outside	Negative Loss in Service
Number	24	5	22	51	6
ter O. K.	7		4	6	
ter Fast	8	2	11	27	4
ter Slow	8	3	7	16	2
ter D. R.	..			.	—
ter Stuck	1			2	—
Total O. K.	29.1		18.2	11.7	—
Total Fast	33.3	40.0	45.5	52.8	66.6
Total Slow	33.3	60.0	31.9	31.4	33.3
Total D. R.	.			..	--
Total Stuck	4.2			3.9	—
...	- 1.3	- 1.0	+ .59	+ .52	+ .50

	Meters Injured: Basement	Meters Injured: Outside	Locations: Basement	Locations: Outside
Number	110	41	716	91
ter O. K.	18	2	94	12
ter Fast	72	14	335	47
ter Slow	32	12	273	31
ter D. R.	—		6	—
ter Stuck		—	8	1
Total O. K.	16.3	4.9	13.1	13.2
Total Fast	65.5	34.1	46.8	51.6
Total Slow	29.1	29.3	38.2	34.1
Total D. R.	..	--	0.8	--
...	..	.	1.1	1.1
... —	+ .35	+ .83	— .98	+ .56

will be noted that where meters were subjected to erature variations, it was found that they ran fast meters listed under the heading, "Temperature tions," were invariably subjected to heat above al, in that they were located in basements near a ce, while on the other hand, those located on the de of the building were subjected to the sun's rays. revailing temperatures below normal were not of ent duration to offset the higher temperature exper d.

will arbitrarily assume that the life of a gas meter gely contingent upon the life of its diaphragm, and the conditions under which it operates materially ten or shorten the life of the diaphragm.

fore attacking the enemies of the diaphragm, it was ht advisable to establish, if possible, the average f a meter under the conditions it was called upon erate with the Portland Gas & Coke Company. Therefore, examined (4)(HH) meter repair cards and d that the last 500 diaphragms replacements were after an average of 10½ years, as set forth in the ing table:

TABLE NO. 5

FIELD AND SHOP TESTS ON METERS CONSIDERED

Size of Meter	3	5	10	30	45
Number of Meters	32	409	10	9	5
Total Number Years Service	119.19	4351.25	109.34	100.03	56.98
Average Number Years Service	7.52	10.64	10.91	11.11	11.39

Size of Meter	60	100	300	Totals
Number of Meters	5	2	1	500
Total Number Years Service	52.66	57.24	10.67	5129.36
Aver. Number Years Service	10.53	28.62	10.67	10.25

The Gas Company, by necessity, must depend upon the records of the meter proving room, and for the purpose of verifying that meters tested on consumer's premises would give the same test after removal to proving room, 32 meters were carefully tested under the supervision of an engineer, on the premises of the consumers, by means of a portable test meter. These meters were then immediately removed and transported in the regular manner to the meter proving room, after which they were tested according to the ordinary routine. The findings are set forth in Table No. 6, as follows:

TABLE NO. 6

FIELD AND SHOP TESTS ON METERS CONSIDERED

Number Meter	Location of Meter	Liability to Temp. Variation	Water in Meter	Is Meter Level	Is Meter Near Wood Pile
534	Basement	No	No	Yes	No
4563	Basement	No	No	Yes	No
5627	Basement	No	No	Yes	No
11662	Under House	Yes	No	Yes	No
14727	Basement	Yes	No	Yes	No
15187	Under House	No	No	Yes	No
15582	Basement	No	Yes	Yes	Yes
16011	Basement	No	No	Yes	No
16525	Inside	No	Yes	Yes	No
18342	Basement	No	No	Yes	No
20239	Basement	No	Yes	Yes	No
22001	Basement	No	No	Yes	Yes
22318	Basement	No	No	Yes	No
23052	Hall	No	No	Yes	No
24193	Hall	No	No	Yes	No
24800	Basement	No	No	Yes	No
25609	Living Room	Yes	No	No	No
27214	Inside	Yes	No	No	No
31205	Basement	No	No	Yes	No
37676	Basement	No	No	No	No
38131	Basement	No	No	No	No
39257	Shop	No	No	Yes	No
40923	Under House	No	No	Yes	No
41828	Basement	No	No	Yes	No
50087	Basement	No	No	Yes	No
62126	Basement	No	No	No	No
63786	Basement	No	No	Yes	No
66669	Porch	No	No	Yes	No
70104	Basement	Yes	No	Yes	No
70724	Basement	No	No	Yes	No
81525	Under House	No	No	Yes	No
66918	Basement	No	No	Yes	No

	FIELD TEST			PROVER TEST		
	% Fast	% Slow	D.R.	% Fast	% Slow	D.R.
	1.0				6.5	
	2.5			2.0		
					4.	
		1.5			1.5	
	2.5			5.5		
			D.R.			D.R.
	10.0				10.0	
			D.R.			D.R.
			D.R.			D.R.
	0.25			+		
			D.R.			D.R.
			D.R.			D.R.
			D.R.			D.R.
	3.5			2.		
	+			+		
			D.R.			D.R.
			D.R.			D.R.
	10.0			8.5		
	7.0			4.0		
			D.R.			D.R.
	1.25			1.0		
		3.5			3.5	
	3.25			3.0		
		3.5			2.0	
	2.25			1.0		
	2.5			1.0		
		1.5			3.0	
	1.5			1.0		
		2.0			2.0	
		1.0			1.0	
		1.0			1.5	
	1.0			1.0		
Total	14	9	9	13	10	9

SUMMARY OF DATA COVERED IN

	FIELD	SHOP
Number tested fast	14	13
Average per cent fast	2.9	2.3
Number tested slow	9	10
Average per cent slow	51.2	49.2
Number D. R.	9	9
Total number tested	32	32
(1) Net inaccuracy in field		30.1%
(2) Net inaccuracy in shop		30.4%
Total difference in per cent		0.3

The meters considered in the foregoing tabulation were removed on orders originating from special cases and are not representative of general conditions, but do illustrate the specific points in question.

It must be considered that temperature conditions in the field were not ideal and no corrections were made in this respect, and a slight allowance should be made. To all intent and purposes, the tests in the field confirm the proving room tests.

However, if we must continue to operate under certain arbitrary periods for meter removals, it becomes interesting to compute the economical point resulting from a minimum loss in operating revenue chargeable to improper registration as compared with the cost of periodical meter changes.

For the purpose of this calculation we shall use the operating costs of the Portland Gas & Coke Company.

There are three factors which constitute the major items from a gas company standpoint in connection with this traffic which must be considered separately:

(1) Frequency of periodical changes and cost thereof.

(2) Frequency of repairs and cost thereof.

(3) Loss through improper registration.

....*Cost of Changing*:—The principal item of expense in the cost of changing meters is readily conceded to be *labor*. It is thought, therefore, that more money can be saved in connection with this performance through routing than in any other way. The efficiency of a meter changer may be readily decreased or increased 25 per cent by the mere fact that he is properly or improperly routed.

The operation of changing meters is ordinarily not complicated and can be accomplished by a fitter receiving a medium wage, and having no considerable amount of experience. It should not be construed from these remarks, however, that any workman of average intelligence is a fit man for the job. Workmen assigned to this traffic should be reliable and of a cautious attitude, thoroughly trained in what constitutes the proper location of a meter and capable of reading and properly interpreting the pressure reading of the water gauge. They should know what constitutes good combustion on appliances, and be familiar with the hourly consumption so that they may substitute a larger or smaller meter, as the particular demands may warrant. In the interests of plant investment, the consumer should be furnished with a meter of a capacity not exceeding the demand, while on the other hand, service warrants a meter fully capable of handling the load and not be overloaded.

The next item if importance in connection with the changing of meters, is that of cartage. The horse and wagon is still conceded to be the cheapest in down-town and strictly close in districts. In apartment house districts where a relatively large number of meters are located, a wholesale delivery of meters is the most advantageous, in which the fitter is dispatched on foot or on street car, and remains in that district until work of that character is finished, his meters and supplies being sent to him daily as the work advances.

The Portland Gas & Coke Company has for the past two years used a fleet of motorcycle side-cars in connection with old age changes, to very good advantage.

Cost of Repairs:—The economical repair of meters is probably accomplished more through organization and ample equipment than by all other items combined. The workmen, by necessity, are continually under the eye of the foreman, and inefficient workmen find the meter shop a poor harbor. For this reason, I repeat that an efficient meter shop reflects almost at once the character of management.

The meter shop also very readily lends itself to a bonus system of compensation for the workmen, and it is recommended that any who are not employing the bonus system should, where circumstances permit, give this idea a trial.

Purpose directs energy, and purpose makes energy.—Parkhurst.

er economy will be attained through the standardization of meters, that is to say, additions to plant should be of one given make, as near as possible. The old saying that "Practice makes perfect," holds good in connection with the meter shop where workmen become familiar and are called upon to handle a larger number of the same type of meters. Standardization of meters not only facilitates the work in the meter shop, but greatly simplifies the buying and keeping of repair parts together with the changing and testing of meters in the field.

Through Improper Registration. For the purpose of this computation we will assume that meters are changed at the expiration of an arbitrary period. I assume that such inaccuracy increases at the rate of one half per cent per annum, hence we have the following tabulation of inaccuracy, and corresponding revenue.

TABLE NO. 7

Per Annum Per Customer Based on Average Monthly Gas Bill of 3,365 Cubic Feet

Per Cent Inaccuracy	Accumulative Yearly Loss in Cu. Ft.	Accumulative Yearly Loss, Dollars
[illegible]	195	$0.26
1	391	0.52
1½	587	0.78
2	783	1.04
2½	978	1.30
3	1174	1.56
3½	1370	1.82
4	1566	2.08
4½	1761	2.34
5	1957	2.60

From the above it now becomes possible to draw up a table showing the yearly cost incurred by leaving the meter in service under the preceding conditions, which table is given below.

Loss of Revenue Due to Inaccuracy Accumulative in Dollars	Cost of Repairs in Dollars	Cost of Changes in Dollars	Total Accumulative Cost	Average Annual Cost
$0.26	$1.85	$1.46	$3.57	$3.57
0.52	1.85	1.46	3.83	1.91
0.78	1.85	1.46	4.09	1.36
1.04	1.85	1.46	4.35	1.09
1.30	1.85	1.46	4.61	.92
1.56	1.85	1.46	4.87	.81
1.82	1.85	1.46	5.13	.73
2.08	1.85	1.46	5.39	.67
2.34	1.85	1.46	5.65	.61
2.60	1.85	1.46	5.91	.59

From the above tabulation it is seen under the assumed conditions that the minimum combined loss in revenue and operating expense occurs with meter changes made every [illegible] year.

[illegible] calculation can be made for any particular [illegible]

It must be remembered, however, that the minimum loss from an operating standpoint in connection with this tabulation will vary from year to year, depending on the fluctuation in the cost of labor and material. Consider, therefore, that the cost of labor and material listed in the foregoing are now at their peak. In the event that the labor and material decline in cost, then the lower cost of meter changes and repairs would materially increase the length of time a meter could be left in service. While on the other hand the calculation is affected by a change in the rates for gas.

Since we have established 10½ years as being the average life of diaphragms removed from at least 500 meters, then we may reasonably assume that the maximum period of continuous service for a gas meter should not exceed ten years.

The analysis of the Portland Gas & Coke Company's meter records as set out in the foregoing plainly shows that it is not necessary to change meters every five years in order to insure the customer or the company against undue loss.

It is definitely shown that the inaccuracies of our meters do not warrant changing on account of old age within a period of less than ten years. How much longer a meter could reasonably remain in service our statistics do not clearly divulge, due principally to the fact that a sufficient number of meters were not available for test that had been in continual service in excess of ten years.

Our findings do prove that it is an expensive policy to remove meters at the end of five years. Our findings do indicate that we should have an opportunity to give the question of old age meter change further consideration and investigation by leaving meters in service for a period of years sufficient to enable us to establish a danger point.

Our computations do show the fact that it costs $4.61 to maintain a meter in service for five years or an average of 92 cents per year, which sum of money includes the loss through inaccuracy, cost of changes and repairs, whereas, if the same meter were allowed to continue in service for at least ten years, our total expense from the same source would amount to $5.91 or an average of 59 cents cost per year. It is evident, therefore, that a saving of 33 cents per meter per year is accomplished on a ten-year old age program.

The Portland Gas & Coke Company has 75,000 meters in use and 15,000 meters are changed yearly for old age reasons on the five year policy. Our operating expense and loss through registration on 15,000 meters at $4.61 per meter would amount to a yearly sum of $69,150.

On the other hand if meters were allowed to remain in service for ten years, our average yearly expense would equal $44.325 or a saving of 33 cents per meter or $24,825 per year in favor of the ten year program.

It is a point easily [illegible] that meters should be spared unless [illegible] The facts [illegible] in this paper do not indicate that a five year old age meter change

policy represents judicial expenditure. It is the opinion of the author that if necessary, a more liberal use of complaint recording meters, a more liberal use of high bill inspectors, coupled with more attention by bookkeepers to consumers' accounts, would, as compared with the expense incurred in connection with old age meter changes, save more money for the company and be more beneficial to the consumer.

SUMMARY

(1) The foregoing tabulations and supporting information lead us to believe that the findings of the modern meter proving room are representative of conditions on consumers' premises.

(2) That the average life of diaphragms is not materially affected on account of the location of a meter, that is set in keeping with the modern interpretation of good practice, and not subjected to high temperatures.

(3) A tabulation of 27,484 meters removed from service of the Portland Gas & Coke Company shows no definite relationship between accuracy of registration and length of period in service.

(4) A logical deduction would be that meters should be changed for cause rather than arbitrarily.

(5) The correct registration of meters is preferably attained by controlling the conditions under which they operate rather than by frequent removals from service.

(6) Given the cost of repairing meters, changing meters and having assumed further that a progressive inaccuracy exists, it is possible by mathematical computation to indicate for these particular conditions the period of time during which a meter may be allowed to remain in service.

(7) That the length of continuous service of a meter is contingent upon the life of its diaphragm.

——Courtesy Pacific Coast Gas Association.

GAS-MAIN STOPPERS

IN 1897 a gas-main-stopper was placed upon the market that has found a splendid field for itself, a field ever increasing with the tremendous increase in gas-main mileage. These stoppers and their partial parallels, viz.: gas main bags, provide dependable shut-off facilities in gas mains; the stoppers acting more than anything else like wooden plugs since they wedge themselves into a main firm and tight.

Safety, dependability, and security are the "three-graces" that are a necessity where gas is to be shut-off in a main during repairs, alterations or the making of connections.

That feeling of dread and fear which is often experienced by superintendents using other methods for stopping-off the gas is a condition that need not exist and will not, where these stoppers and only dependable and approved bags are used of the Goodman type.

It is quite possible that in the two fields of gas, manufactured and natural, there are many who are not aware of the fact that stoppers and bags such as we have mentioned are to be had. We say this because there are constantly changes taking place, new men are being placed in charge and men are being moved from companies using old methods to important positions with other companies that are progressive, yet may not yet have adopted this system.

We recently dropped a line to Mr. Patrick Goodman, owner of the Safety Gas Main Stopper Company, asking information regarding the use of these appliances in cast iron lines and steel lines, respectively of manufactured gas companies and natural gas companies. In reply Mr. Goodman states that while naturally any form of bag will find best resistance on the interior of a main where it is rough rather than smooth, viz.: in a cast iron main as compared with a steel main, yet with smooth surfaces the canvas covered bags hold more securely than plain rubber bags, though in dry mains the rubber also holds well.

A gas superintendent, recently in speaking of his use of these stoppers and bags, said, 'I had occasion to use a stopper in a wrought iron pipe that had been somewhat flattened out of shape. A stopper because of the unshapely form of the main would not hold alone, but notwithstanding the misshapen wrought pipe I was able to hold absolutely by using both a stopper and a bag." Thus, it will be seen that even a misshapen main can be made tight with these Goodman appliances.

Directions are given for the use of these appliances and when followed their service is guaranteed, yet like a pneumatic tire on an automobile, a condition might arise causing a blow-out after a tire had been in service, though not attributable to a defect in the tire. So such is possible with a bag used in stopping a main. Such condition, however, does not exist where a regularly built gas main stopped is used in place of a bag. A stopper is the acme of service. A bag comes next. These Goodman stoppers are made from four three inch up to 48 inch and a Goodman gas main stopper of twenty four inch can be inserted and the gas shut off in thirty seconds after the plug has been removed. The stopper is made of steel spring parts, properly cushioned and covered with leather and canvas, so when expanded in pipe, tightness is made sure; it cannot collapse or burst or give way under pressure, nor can it be pricked from the rough edges of pipe.

Taps may be had to admit of stoppers up to forty eight inches in diameter and stoppers may be had up to that same large diameter. The canvas covered bags we are told are sold on trial, these in sizes from four to twenty inches, while the plain rubber bags are in sizes from two to twenty inches.

In general, pride is at the bottom of all great mistakes.—Ruskin.

Science In Advertising

How to Interest, How to Drive Home, How to Bring Results

G. P. BLEASDON, G. D. MANTLE, C. B. BARNICK

the man who has charge of the Gas Company advertising will realize, once and for all, that he has at his command as definite a set of laws, and as definite reactions following the tion of these laws, as his brother in charge of nufacture. it will not be necessary to point out vantage of efficient publicity to the public utilities rs and reports. The necessity will make itself st in the results obtained.

factory returns can not be obtained from publicity defies the fundamental psychological laws of ising.

very advertisement there are two prime factors tacle to be advertised, be it gas, an appliance or dwill of the Corporation, and the market for the The object of the advertisement being simply the former to the latter. The fundamental laws rtising follow from this.

Advertisement Must Be Read. To effect any is first of all necessary that the advertisement e read. Unless the copy writer can reasonably himself of this his labor is in vain.

he object of the average newspaper reader is to he news rather than the advertisements, the latter ompete with the former in interest if they are to attention.

ompete with the news there must be in the illus , in the headline, or in the opening sentence of rtisement something that will attract the atten the reader from the surrounding columns, and lance of the copy must be so written that the of the reader, once attracted, will be held until ry is told and the desired reaction has taken place reader's mind. It is a proof of the good adver- nt if it is remembered by the average reader four hours after it is read.

he value of an illustration to attract attention and ame the story, there can be no question. For per worth a good line drawing with plenty of con nnot be excelled. The illustration must however, definite relation to the copy. Illustrations which o connection with the copy are worse than useless.

illustration itself must have interest. A simple of a water heater or a gas range attracts the ntion only of a few who are actually interested in these appliances. An illustration of one of these appli ances in connection with some action on the part of the figures which is sufficiently out of the ordinary to excite curiosity has, however, a definite value which is too often overlooked even by experienced copy writers.

Should the use of an illustration prove impracticable on the score of expense, careful thought must be given to the head line and to the opening sentence.

Here again the greatest care must be exercised that head line and opening sentence have a direct relation to the copy. We all remember the disappointed feeling following the reading of one of the old time advertise ments which started off with what appeared to be the thrilling details of a bloody murder and ended up with an invitation to use someone's pink pills.

It is the copy writer's duty to find the human interest side of a seemingly dull subject and to play upon the feelings of his readers with that interest.

Instincts To be Appealed To. In order to use this interest effectively, it is necessary to appeal to one or more of the human instincts.

Those most easily touched by the advertisements issued by a Gas Company are as follows:

(1) Appetite (Hunger, Tastefulness). Applicable particularly to gas cooking appliances.

(2) Comfort. Applicable to all gas appliances from a labor saving standpoint, particularly applicable to water and house heating.

(3) Devotion (Faithfulness, Loyalty). The point of appeal in all good-will advertisements, also used in ap peals to one member of a household to purchase appli ances for the convenience of another, and, most important, the love of a mother for her children.

(4) Fear (Timidity, Caution). May be used with discretion in pointing out the safety of a gas as com pared with other fuels.

(5) Humor. Should be used with caution. The reader is apt to remember the joke and forget the adver tisement. It is difficult to take seriously a subject which is treated humorously.

(6) Acquisitiveness. This includes the bargaining in stinct and is one of the most valuable appeals if not overdone. Do not make your bargains too frequent. When you put on a sale, put it on at the right time, and if you advertise a bargain let it be a bargain.

Nothing is more short-lived than pride.—Johnson.

(7) Competition—The instinct of the average person is to want everything just as good as her neighbor and a little bit better.

(8) Curiosity—A particularly valuable appeal in putting a new or little known appliance on the market. In fact the most valuable appeal of all in this case. Just tell sufficient of the story to make the reader ask for the balance of the information. Everyone wants to know why the wheels go round.

(9) Ornamentation—Appeals to the aesthetic side of the reader. A particularly strong instinct of the modern woman.

(10) Imitation—The instinct to follow the fashions. If sixty per cent of the houses on one street are heated with gas, it is easier to sell the balance than if none of the other houses were using gas house heating appliances. This instinct is always a good one to appeal to in closing an advertisement whenever it is possible.

(11) Cleanliness—An instinct which is strongly appealed to by all gas appliances.

Do not attempt to appeal to all the instincts at once. The result would simply be confusing. Plan a series of advertisements each appealing to one or perhaps two or three allied instincts.

Presuming that the copy writer has decided on an illustration or head line which will attract the attention of his reader from the surrounding news and advertising matter and that he has decided upon the instinct or instincts to which he desires to appeal, he has still to fill three other fundamental demands. He must (1) Hold the interest of the reader until his closing sentence is read; (2) He must create a desire for possession of whatever he may be advertising; (3) He must stimulate action on the part of his reader to complete the act of possession.

These three, with the attraction of attention, form the links of a chain. All are useless if one is broken or missing.

To hold the reader's interest, the copy must be clear; it must be concise, it must be absolutely convincing; it must be written in simple, non-technical English which flows readily and evenly; it must stay unwaveringly by the subject at hand without an extraneous word.

To create desire, the copy writer must place himself unreservedly in the place of the reader. The points which would naturally appeal to the writer may not appeal to his prospects at all. He must play upon every sensation affecting the instinct he is appealing to, gradually building the desire to a climax before he comes to his closing stimulant to action.

Bald cataloging of the merits of an article creates little desire. It is only by picturing what these merits actually mean to the reader that they can be driven home, and it is in emphasizing this actual application that the illustration can be best utilized. If the copy writer can make his reader mentally picture the appliance in use in his, or her, home, he has gone a long way towards achieving his object.

The closing stimulation to action should be brief but full of punch. To omit this stimulation is to allow the advertisement to pass out of the reader's memory. The easier the action by which the sale can be completed, the more effective will be the advertisement. The use of the telephone is always to be encouraged and a postal card is easier to write than a letter. Coupons are excellent for certain types of advertisements.

Gas Companies are in a favorable position as compared with other merchants in that many people call at the office to pay their bill Advantage might well be taken of this in advertisements.

Copy is generally divided into two classes: (1) "Human Interest," which appeals almost entirely to the instincts and very little to the reason; and (2) "Reason Why," which appeals to the reason rather than the instincts. Both are valuable and may be applied to most types of gas appliances. In general, it may be said that men are more susceptible to "Reason Why" copy and women to "Human Interest." It may also be said that appeals to the purely practical instincts demand "Reason Why" copy, and appeals to the aesthetic instincts "Human Interest" copy.

Do not exaggerate; do not use superlatives; do not try to say too much; write as you would talk to your reader.

A salesman does a good day's work if he talks to twenty prospects. Do not try to write a message to thousands in ten minutes.

Goodwill Advertising:—In goodwill advertising the instincts to be appealed to are limited to Curiosity, Devotion and Pride (particularly Civic Pride). The creation of a desire to purchase is replaced by the creation of sympathy with the objects of the corporation and the stimulation to action is replaced by a strong summing up of the preceding copy. Some form of climax is an essential to every advertisement if any permanent impression is to be left on the memory.

Owing to the limited number of instincts to be appealed to, and the fact that those instincts are less easily approached than any of the others, Goodwill Advertising requires far more skill than any other and rare, indeed, is the copy writer who can give his advertisements the necessary punch and at the same time achieve his object by selling confidence in the corporation to his readers.

The delusion that every public utility corporation is an octopus existing solely for the purpose of draining the life blood of the consumer is deep seated even in these enlightened times, and it is only by the greatest test and real frankness that this prejudice can be overcome.

Though it is essential that the public should realize that a very small portion of the earnings goes into the

Justice is exalted, strengthened, and honored by the judicious praise of merit.—Winter.

he common stock holders, the bare use of sta
chart will not ensure the reader's attention
ry are repulsive to the very class that Good
Strong is intended to reach

me have been spent by big corporations on a
wdwill advertising based on charts and sta
ie It is a proven fact that these advertise
not read by one in one thousand of the readers
publications in which they are published

s to your Committee that the story type of
ent is that best adapted to ensure the atten-
r reader to a goodwill appeal and that great
s are open to the skilled copy writer in the
nt of a series of advertisements of this type
wever, to the supreme importance of the
publicity work and the fact that a carelessly
vertisement may do more harm than good, it
recommended that the preparation of goodwill
trusted only to a skilled advertising man

nal suggestion we would point out the pos-
f Gas Company advertisements showing the
en of stockholders common, preferred and
ds as business and earning power A
ment of this kind attractively presented would
y much to overcome the "bleated Capi-
"

[illegible]

SOLID ABSORBENTS

Prophecy Regarding the Recovery of Gasoline

[illegible]

[illegible] prediction based on several
[illegible] experimentation and larger scale
[illegible] of absorbents Methods of
[illegible] gasoline from natural gas will be
[illegible] through this use
[illegible]

[illegible] it is
[illegible] surely
[illegible] natural gasoline
[illegible] the quicker will they pro-
[illegible] gasoline [illegible] and [illegible] expense

[illegible] speak in terms
[illegible] pressure and high
[illegible] and much
[illegible] Solid
[illegible] are bet-

[illegible] was
[illegible] would
[illegible] the field Silica
gel is being pushed, and a new one, iron gel, will soon enter the ranks On lean natural gas they have no equal

On rich gas of over three gallon content, where the residual gas is small in quantity the cooling problem has not been entirely solved but it will be The steam consumption for charcoal distillation has been decreased to six pounds per gallon of gasoline distilled Saturated steam (not superheated) is used

Oklahoma operators instead of changing their plants to combination compression and oil plants should change to compression and solid absorbent plants This is said with a firm conviction that it is the economical thing to do the writer's viewpoint here is entirely that of a petroleum engineer convinced that the solid absorbent process is the next economical step in the progress of the natural gasoline industry Not only that, but they will displace the oil processes for the extraction of "light oil" from artificial gas, will be used in refineries for recovering gasoline from tail gas from tank gas and in many industries for recovering valuable solvents Their further use will consist in making close fractionation cuts of mixtures and combination purification and extraction work as in recovering gasoline from "sulphur" gases There is a big field ahead for them This is my prediction

METER TAMPERING

[illegible]

WHILE utilities have an undoubted right to [illegible] service to parties who misuse [illegible] the Pennsylvania Public Service Commission has declared the charge of tampering with a meter is insufficient to be sustained except upon clear and satisfactory proof In a case where [illegible] was sufficient to convince the commission a gas meter was ordered restored The Utah Public Service Commission ordered a consumer whose electric meter had been tampered with [illegible] knowledge [illegible] on penalty of [illegible]

TARRED ROADS MENACE FISH LIFE

[illegible]

THE pank [illegible] the most [illegible] from [illegible] carbolic [illegible] and the [illegible] Experiments prove that the [illegible] and fish are [illegible] by the carbolic acid [illegible] even where the [illegible] is [illegible] as to be almost undetectable

le have prejudices against a nation in which they have no acquaintances.—Hamerton.

Meter Construction

A Clear and Concise Setting Forth of Facts Pertaining to Meter Construction and Operation

By OTTO GOLDKAMP and C. M. VAIDEN
Foremen of Gas Meter Shop and of the Record Department, San Diego Gas & Electric Co., San Diego, Cal.

We have found in our chats with the commercial men of gas companies and we have had many man-to-man chats of this nature throughout the country, that comparatively few are they who know how a gas meter is constructed, or know how it operates, or understand the direction of the flow of gas and the means of operating the hands on the dial.

We publish the following from "Glow," issued for the employes of that well organized San Diego gas company in California, in order that such as have more recently come into the employ of gas companies in the revivifying of commercial departments, may gain an accurate and comprehensive idea of meter construction and meter operation.

While publishing this article with illustrations for the benefit of those we have named, we at the same time would suggest that the use of such illustrations as are here shown, with concise descriptive matter, or matter written more in story form, might well be presented before the peoples of our cities that they might better comprehend how well constructed, how simple, and likewise how accurate must be the meters that practically unerringly click, click, click while gas is being used in the home, in the shop, and elsewhere. The following is the descriptive matter as prepared by the authors:—Editor's note.

FIGURE No. 1

FIGURE No. 2

IN the early days of the industry, before the invention of the gas meter, consumers were supplied with gas on a "time used" contract; that is, a flat rate was paid for a certain number of lights to be burned a specified number of hours each night. If the consumer burned his lights past the hour specified in his contract, it was the duty of an inspector to notify him by rapping on the premises with an iron rod. If the consumer persisted in disobedience, the inspector would shut off the supply at the sidewalk service tap. Disputes between the consumer and the gas company were, of course, quite numerous and, therefore, a device for measuring the quantity of gas actually delivered became a matter of necessity.

First invented over one hundred years ago the gas meter has since been gradually improved until today a more simple and accurate mechanism would be difficult to find.

Structural Features:—By referring to the four accompanying sketches, the construction and operation of the meter may be more readily understood.

Its main parts consist of an outer case, two diaphragms, connecting arms, a valve and recording device.

Purpose is what gives life a meaning.—Parkhurst.

agms, which are made of the finest grade of , are arranged to act as a bellows expanding ging similar to an accordion They also serve talls which divide the meter into three com

es of Operation After passing through the shown in Figure 1, the gas enters compart Here its pressure forces the right hand dia- move in toward the center of the meter, whi h uses a part of the gas contained in compart to be forced through the outlet as indicated

ed continuous, the full details of valve openings ges between the different compartments are n these sketches, but the path of the gas be followed by the arrows

re 2 it will be noted that the diaphragm on has reached the limit of its movement inward, gh the action of the connecting arm has shifted to return back and discharge the gas between it and the side of the meter case in compartment

After which (see figure 4), the left diaphragm is forced back in a similar manner and discharges the gas in compartment "A"

This series of operations is repeated as long as gas is delivered through the meter

Through automatic distribution of the incoming gas the different compartments by means of the valve only one diaphragm is put in full motion at a time

To determine what quantity of gas has been passed over any period, it is only necessary to ascertain the number of times each compartment has been filled and emptied, the sizes of the compartments being standard and accurately known As the emptying of the compartments depends on the movements of the valve, this measurement resolves itself into a matter of counting the valve revolutions Through simple connections such

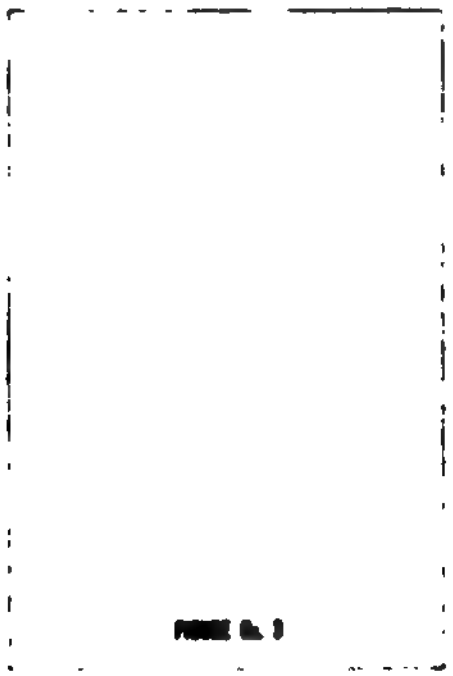

FIGURE No. 3

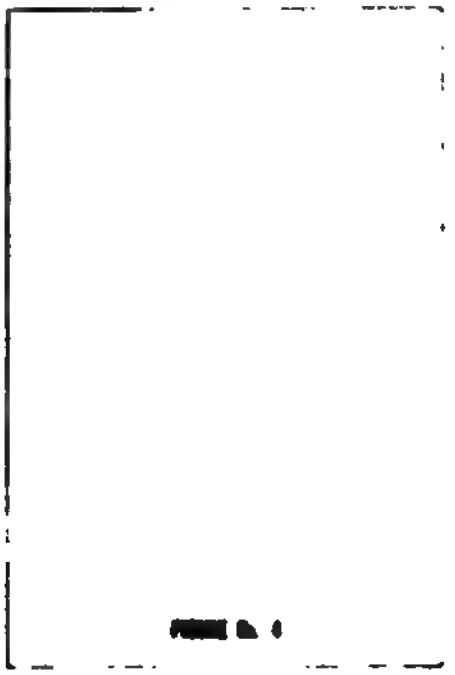

FIGURE No. 4

to a new position opening a passage through gas flows into compartment "A," behind aphragm The left diaphragm is now forced e center of the meter further decreasing the e center compartment "B" and forcing more gh the outlet

ngoing movement of the left diaphragm has ted the position of the valve This closes the compartment "B" but opens an inlet which ow incoming ga

ferring to Figure 3 the pressure of the in is seen to force the diaphragm on the right

counting is automatically registered on the meter dials and directly converted into the cubic feet equivalent of gas passed

Inaccuracies Favor the Customer Although seldom out of order the meter occasionally is injured so that it does not register correctly There are four general classes of disorder in meters, commonly known as stuck "dead" fast or "slow" In such instances it may be of interest to meters that the percentage of error is generally in favor of the consumer In two cases the meter permits more gas to be delivered than is registered and in the third and fourth cases the gas is shut off with consequently no registration

Consideration gets as many victories as rashness loses

STANDARDIZATION OF INDUSTRIES

IN a communication received by our editorial department setting forth what is being done by the American Engineering Standards Committee, Mr. A. A. Stevenson of Philadelphia writes:

"The relation of the great Federal research bureaus to industrial standardization is no less important than that of the great purchasing bureaus. Research and standardization are very closely related, and in many ways they are supplementary. By showing the need of reliable information as to the facts, in order to determine the best practice, and secure agreements on moot questions, standardization acts as a powerfhl stimulus to research and development. But what is of even greater importance, standardization is a principal means of getting the results of research and development work into actual use in the industries, so that the industries themselves, and finally the general public, may reap the advantages.

One of the most direct and effective methods of getting the results of the investigational work of the research bureaus introduced into, and of service to the industries, is by co-operation between the research bureaus and the industries, through working standardization committees, which must necessarily be joint committees of the various bodies interested in each specific project. The many advantages of such co-operation, both to the industries and to the bureaus, are obvious.

What is no less important, such co-operation is very effective in helping to extend a knowledge and appreciation of the work of the bureau in the associations speaking for the industry. As illustrating the significance of this, considerably more than a hundred national organizations are now co-operating through accredited representatives in the work of standardizing committees functioning under the auspices and rules of procedure of the American Engineering Standards Committee. In this work the Bureau of Standards, the Bureau of Mines, and the Forest Service are taking a very active part, and in so doing are rendering extremely important services to their respective industries. This co-operative work will be no less valuable to these bureaus than it is to industry.

Clearing House for Standardization Essential:—In order that standardization along national lines may be brought about, it is necessary that there be some central body to act as a clearing house in standardization work. It is essential that there be brought together information concerning the organizations by which standards have been formulated and are being promulgated and details relating to such standards as are already in use. From the central body charged with the duty of collecting this information, it should be transmitted promptly wherever needed to insure the elimination of conflicts in the formulation of standards. The success to be expected from a central body organized for the purposes just stated obviously depends upon the authority invested in it, and the recognition received by it from the organizations throughout the country doing standardization work.

The need for closer co-operation in order to prevent duplication and the promulgation of conflicting standards in America crystallized in the appointment of a committee by the American Society of Civil Engineers, the American Institute of Mining and Metallurgical Engineers, The American Society of Mechanical Engineers, the American Institute of Electrical Engineers, and the American Society for Testing Materials, which formulated a plan resulting in the organization of a permanent committee made up of representatives of the five societies mentioned and the three Government Departments of War, Navy and Commerce. The Constitution of this committee, the American Engineering Standards Committee, was broadened later to permit the representation of other bodies, and at the present time it has 50 representatives from 18 bodies or groups of bodies, including 7 national engineering societies, 13 national industrial associations, and 5 Government Departments, including the Departments of Agriculture and Interior in addition to the three already mentioned. There are now 37 different national organizations which have accepted sponsorship for a total of 59 projects. In addition, there are 108 co-operating organizations other than the sponsor bodies, bringing the total to 145 national organizations actively co-operating in the work of the American Engineering Standards Committee who have appointed accredited representatives to serve on sectional committees. The Committee does not concern itself with the technical details of the standards submitted to it for approval, or formulated by committees organized under its auspices, but limits its investigations to a study of the procedure followed in developing the standard with particular reference to the representative character of the group of persons by which the standard has been formulated and the organizations by which it has been adopted or approved.

The decision of the American Engineering Standards Committee not to deal with technical details has proved a source of great strength in its real work of insuring the full co-operation of organizations producing standards not in conflict."

We are rapidly approaching a time of sound foundation work upon which to build a better economic and more sound business structure than ever before.

LUCK

LUCK means rising at six o'clock in the morning. The opportunities you have never failed to grasp.

The trains you have never failed to catch.

Luck means the constant and complete use of your own resources,

YOUR degree of "luck" depends upon how you take advantage of opportunities to increase both sales and profit. ***The Shur-On Chronicle.***

Set not thyself to attain much rest, but much patience. Benham.

The Gas Fired Boiler

Selling End Discussed and Splendid Suggestions Offered

[illegible]

[illegible] better that the user of steam under [illegible] that may be met by gas boilers should [illegible] such boiler [illegible] near his work as possible [illegible] getting [illegible] steam employing auto[illegible] on the gas boiler to insure constant steam [illegible] production

[illegible] up to twenty four inches or [illegible] water needs no engineer. All of those [illegible] surrounding the employing and re[illegible] are done away with. Of course, with large boiler installations for in such [illegible] necessary to employ an engineer, yet there time can be devoted to some other work, [illegible] does not need his service all the time, [illegible] can earn his wages in many ways [illegible] factory.

[illegible] on the gas boiler depends entirely [illegible]. When production is stopped, the fuel [illegible] easily gotten up at any time. It is [illegible] the coal bin or to carry cord [illegible] necessary is to light the pilot and [illegible] everything is ready.

[illegible] getting up steam on a gas [illegible] depending entirely on the [illegible]. If the stop valve of the boiler is [illegible] twenty to thirty minutes to [illegible] of the small boiler plants, [illegible] and there is nothing better [illegible] such plants, because [illegible]. It is impossible to com[illegible] with the coal boiler because the [illegible] steam boiler is com[illegible] gas of a very high thermal effi[illegible] gas boiler [illegible] the fire tube type the tubes [illegible] diameter in order to [illegible] more direct com[illegible] water [illegible] the boiler. It is auto[illegible] placing it near the [illegible] gives an advantage by [illegible] steam [illegible] through [illegible] problem is the [illegible] heat that is in the [illegible] the point [illegible] of the plant.

[illegible] Have the same draft. Even the same changes is effected by the change of wind, and atmospheric conditions. In one case more steam than is necessary would be made and another time, it would be difficult to get enough steam. Poor firing also affects the efficiency. Up to the present time, the coal boiler has not been made entirely automatic. Considering the above the efficiency of the coal boiler is very uncertain. Boiler repairs are much higher on the coal boiler. Replacing of burnt grate bars, and deterioration of plant from wetting ashes around boiler count up quickly.

Gas steam boilers may be divided into two classes high and low pressure. By high pressure I mean any pressure over fifteen pounds gauge. By low pressure I mean below 15 pounds gauge.

High pressure boilers are excellent appliances where high temperatures are desired, such as candy factories where the use of vacuum kettles is employed. They are also used in the following instances: hat factories for hydraulic presses, driers and hat steamers, creameries, for pasteurizing milk, heating water, washing cans and bottles, refrigeration plants of the absorption type for heating the aqua solution in the generator. Shoe factories for toe-steamers, dry rooms and wax heaters. Clothing manufacturers, for pressing irons, steaming machines and sponging machines, laser supply companies for cooking pie fillings, jellies and creams, bakeries for steaming ovens.

The low pressure boiler should be used wherever possible. It has proven more satisfactory to operate than the high pressure boiler. This is perhaps on account of greater efficiency. The higher the steam pressure the greater will be the temperature, consequently the higher the pressure the greater will be the flue gas losses. The high pressure boiler is not as easily equipped with automatic water feeds. On the low pressure boiler an automatic feed is easily installed and acts satisfactorily and gives the customer a more complete and modern gas-fired steam boiler.

Installations recently made in Boston with low pressure boilers are as follows: Heating houses, heating dressing rooms and heating water for laundries, use in [illegible] plating works, for heating [illegible] tanks, [illegible] mills for heavy dyeing [illegible] creameries for pasteurizing milk, [illegible] plating works, for steaming ovens.

A few of the questions that will have to be answered in selling gas boilers are given herewith.

arrels would not last long if the fault was only on one side.—La Rochefoucauld.

1. How large a boiler do I need?

The boiler should be large enough to maintain a constant pressure at maximum demand.

2. What will the boiler cost?

Quote the price of the boiler delivered. If figures have to be made for installing, it is much better to quote on the entire installation ready for work. In most cases the piping costs are as much as the boiler itself.

3. What will it cost to install?

There is only one way to handle this, and that is to have an estimate made, and quote with the boiler.

4. What will it cost to operate?

Quote the rated gas consumption of the boiler. You must be careful and not stop at this point. Be sure to impress on the customer's mind that the gas consumption of the boiler means nothing by itself, and it is impossible to determine the monthly gas consumption, even approximately, for this plant consumption depends entirely on production, and as the boiler is automatic, all variations in steam requirements are credited by the gas regulator.

5. How much more will it cost than coal?

Do not allow your customer to compare gas with coal, as I explained above.

6. Will it maintain a certain pressure?

Yes, this pressure will be constant. Always be careful to get the proper size boiler for the job. If the boiler is not figured large enough, it will be only a short time before it is back in the warehouse of the Gas Company, and it is better not to sell at all, if the proper size cannot be installed.

7. Is it safe?

It is safer than any other type of boiler. The fire can be instantly shut off, whereas in the coal boiler, it is necessary to cover the fire with ashes or coal, and then the heat is only partially done away with. If the fire is hauled out, a more terrific temporary heat is created. The gas boiler is automatic and excess pressure is eliminated. In the coal boiler, it cannot be readily checked.

8. How long does it take to get up steam in the morning?

On the boiler, without equipment attached, it takes twenty to thirty minutes for about fifty pounds.

9. Do I need an engineer?

In Massachusetts, any low pressure boiler with police safety valve can be operated without a licensed engineer. This also applies to high pressure boilers twenty-four inches in diameter and under. It is necessary to employ an engineer on high pressure boilers over twenty-four inches in diameter.

10. Where will I set the boiler?

Always place your boiler as near the equipment as possible. The gravity return system in many cases is the most satisfactory. In this case, the boiler is placed on the floor below the equipment if possible, and take steam lines from the boiler to the different appliances. The returns from the appliances should run back to the lower part of the boiler, using check valves at each appliance, and one at the boiler. In these lines, the only losses are those of radiation. If the boiler is placed on the same floor as the equipment, it is necessary to install either return traps and receivers, or pumps and receiver.

11. How long would it take for delivery?

Never specify a definite date, always do your best to get the boiler on the job as soon as possible. Delays mean cancellations.

12. Does your boiler pass the required inspection?

Each State has its own boiler laws, and the salesman should make himself familiar with them, so that he may answer properly.

13. Could I add more equipment to the boiler you specify?

Do not give the customer permission to add any more equipment to the boiler. In most cases they will overload the boiler, and it will eventually mean the loss of a gas consumer.

14. Where do I save by using gas?

The customer saves by having a hot, dry steam when and where he wants it at a short notice. It is the most efficient fuel for the different kinds of work mentioned.

15. How much pressure can I carry?

Know the type of boiler you are selling, if it is high pressure, it generally means any pressure from zero to a hundred pounds. If low pressure, any pressure from zero to fifteen pounds. Higher pressure boilers can be constructed specially.

16. What are the dimensions?

Always give the proper dimensions and never crowd your boiler. Dimensions are usually given in the manufacturer's catalogues.

17. How much does it weigh?

Manufacturer's catalogues usually give the shipping weight, which answers for the purpose.

18. Where can I see one working?

This is where you sell or lose the boiler. If you have been on your job, you will have some very good plants to show him. Always tell the truth, never misrepresent your goods. If you do, you are in danger of being caught, and you will lose the sale. In case you sell the boiler, and you have misrepresented anything, it is worse than ever. Always sell a customer what he should have, rather than what he wants. When a gas salesman once sells the customer, he then becomes a consumer, and he deals with the company thereafter. Always be sure that you are right. Know your boiler and what it will perform, and you will work up a nice steam boiler business for your company.

——By courtesy New England Association of Gas Engineers.

We know what we are, but know not what we may be. Shakespeare.

UTILITIES INCREASING EARNINGS

THE following earnings of 1921 and 1920, also column indicating increases in seven of the Standard Gas & Electric Company properties, are herewith:

Fort Smith Light and Traction Company:

12 months ended	Dec. 31, 1921	1920	Increase
Gross Earnings	$1,059,048	$1,070,391	$ 11,243*
Net Earnings	302,182	300,793	1,389

Louisville Gas and Electric Company:

12 months ended	Dec. 31, 1921	1920	Increase
Gross Earnings	$4,891,706	$4,469,317	$422,389
Net Earnings	2,243,413	2,095,490	147,923

Mobile Electric Company:

12 months ended	Dec. 31, 1921	1920	Increase
Gross Earnings	$ 764,222	$ 737,446	$ 26,776
Net Earnings	251,091	214,081	37,010

Mountain States Power Company:

12 months ended	Dec. 31, 1921	1920	Increase
Gross Earnings	$ 992,932	$ 928,923	$ 64,009
Net Earnings	299,925	294,292	5,633

Puget Sound Gas Company:

12 months ended	Dec. 31, 1921	1920	Increase
Gross Earnings	$ 168,964	$ 163,985	$ 4,979
Net Earnings	29,261	25,916	3,345

San Diego Consolidated Gas and Electric Company:

12 months ended	Dec. 31, 1921	1920	Increase
Gross Earnings	$3,814,918	$2,661,040	$1,153,872
Net Earnings	1,104,898	883,427	221,471

Western States Gas and Electric Company:

12 months ended	Dec. 31, 1921	1920	Increase
Gross Earnings	$2,547,165	$2,224,910	$322,255
Net Earnings	858,677	815,286	43,391

*Decrease.

In the above right-hand column it will be noted but one star appears. This star indicates a decrease. All other items shown in the column indicate increases. We ask what better evidence could we have than these showings that things are developing well in the field of utilities? We publish this statement in order to *indicate* the trend of the times.

THE CASH BONUS FOR EX-SERVICE MEN

THERE has just been received at our editorial office from the Chamber of Commerce of the United States a setting forth of the result of a referendum vote upon this subject. The result of this ballot showed 72 per cent of the interests forming the National Chamber, voting against the enactment of a law providing such. However, expressions were strong in favor of a form which would not be indiscriminate. In other words, favoring the care of those disabled, etc,, such as is now being carried on. Also, assisting others not disabled, but whose needs might require assistance.

It would seem that the desire on the part of the Chamber of Commerce of the United States was not to prevent care of needy ex-soldiers, not an effort backed by a selfish motive, but to arrive at the opinions of a vast number of our very best thinkers as to what course should be followed at the present juncture.

Votes were cast by business organizations in 375 cities, 46 states, in the District of Columbia, Alaska and Hawaii.

In concluding, the communication states:

"Adequate relief for the disabled still remains the first step in the National Chamber's program. A present expenditure of more than $1,000,000 a day for disabled men is evidence of the desire of the people that those veterans who suffered physical or mental impairment shall be cared for adequately until returned to a life of usefulness and independence. Beyond that point the National Chamber will continue to advocate legislation for the benefit of the healthy uninjured veterans which will include opportunities for vocational training and land settlement aid, constructive measures which are best calculated to make every ex-service man an independent, self-respecting member of his community."

EUREKA'S OUTPUT

AT Eureka, Cal., where the Western States Gas & Electric Company (a Byllesby institution) is under the able management of H. L. Jackson the following figures hold good. The net earnings during the year of 1921 to December 31st, were $90,899.00, while to November 30th, practically a month shorter period in 1921, the net earnings are shown as $151,866. The gas output in cubic feet during the 1911 period was 24,120,280, while in the 1921 period the output was 31,710,000.

There are in Eureka 1,224 customers in the gas division as against 718 on February 1st, 1911, showing that the company is pushing ahead in this department, although the growth in number of customers in the electric department in the same company, has been from 2,206 in 1911 to 6,480 in 1921.

SUFFICIENT GAS THIS WINTER

THERE have been many who have asked the question, "why is it that this winter in many cities supplied with natural gas, the volume has been so greatly in excess of the volume at hand during the past few minters?" The public finds it difficult to understand the situation, though it would not be so difficult to grasp were one to hearken in circles of gas interests. However, it is enough to state that the supply in many cities where even suffering from gas shortage occured a year since, has this winter been such as might be designated "adequate," and communities are happy.

Opportunity makes us known to others, but more to ourselves. La Rochefoucauld.

terlocking device continues to act in either case so that the wrong valve cannot be manipulated. There is also a special safety lever on the motor box used for completely shutting down the generator. In case of emergency all that it is necessary to do is to turn this lever and the automatic controlling system will completely and safely stop all the operations of the generator, shutting off the various valves in the proper rotation and at the proper time so that there can be no explosion.

In the electric generator room of this plant, where the power for the operation of the automatic device is developed, there is a special generator which prevents the voltage from dropping and interfering with the operation of the device, in case there should be any variation in the load on the current from other parts of the plant—a safety device to make the other safety device completely safe.

Another interesting safety device at the North Station, one that could be used in any plant having a boiler room, is a system of lights which keeps the firemen informed of the amount of water in the boilers. This consists of a red and a white light arranged to rise and fall with the water in the water gauges. When the red light is up the fireman knows he needs more water. When the white light is up it indicates that there is sufficient water. The fireman thus knows the conditions without having to come up to read the gauges, and this knowledge at times may mean the prevention of a boiler explosion.

After the gas has passed through the various processes of "scrubbing" to cleanse it and remove the sulphur, and has arrived in the purified colorless state ready for use, it passes into the commercial holder, and thence it is pumped by high pressure exhausters into the distributing system. This distributing system, while designed primarily for efficiency, has an important safety significance in affording a measure of protection to the company's customers against accidental asphyxiation. In the early days of the gas industry gas was delivered only under the pressure of the tank of the commercial holder dropping lower and lower into its well. As a result users nearest the gas station got the highest pressure, and the farther away the consumer was the lower was the pressure. This would result sometimes in the pressure going so low in the lines of some of the more remote customers that the flames would go out. Then when the pressure rose again the gas would flow in, and there was danger that a person would have left the using device valve open and consequently be exposed to asphyxiation, or explosion by carrying a light into the gas filled room.

In the present system of distribution this has been overcome by the installation of some 80 underground vaults in various parts of the city. The gas pumped from the station at high pressure, comes into these vaults from the large mains, and here other high pressure exhausters pump it through the service mains into the homes of consumers. This system prevents the pressure at the consumer end from ever getting so low that the fire would go out, and gives a constant equal distribution to all customers, regardless of their location with reference to the gas station, and regardless of the load upon the station at any one time.

We next visited the Refining Plant where benzol, toluol, and solvent naphtha are manufactured. Because of the highly explosive character of these chemicals, safety is the most important factor entering into their manufacfacture and handling. The very location of this plant is a safety measure—it is isolated away out in Hawthorne, a prairie district on the outskirts of the city, three-quarters of a mile from the nearest car line, making it as inaccessible as possible to trespassers and so far away from any homes or other buildings that, in the remote event that an explosion should occur, it would be unlikely that any persons or property other than those on this plant would be in danger.

The plant is surrounded by a high fence, topped with barbed wire, to keep out persons who have no business there. The gate is always locked, and no one is admitted without going through a thorough inquisition and satisfying the gatekeeper that his presence there is for a legitimate purpose. And once admitted the visitor is under the vigilant eye of an escort as long as he is on the premises.

There are two absolute rules on this plant which are enforced to the hilt; the first is that there must be no smoking anywhere on the premises; the second is that every employee must understand the prone pressure method of resuscitation and be qualified in administering it. Furthermore, all the men are required to keep in constant practice on this—practice is part of the routine at every safety meeting, and the safety meetings here are held every two weeks instead of once a month as on the other plants of the gas company.

The buildings on this plant are all built of fire-resisting materials—there is not a bit of wooden construction on the plant. All the glass in windows, skylights and doors is wire-glass which can resist breakage in the heat of a conflagration much better than ordinary glass. All electric switches are located on the outside of the buildings, and enclosed in iron boxes, to prevent the possibility of sparks igniting the highly explosive gases. Telephones are located close to every place where men work, connecting directly with the main office of the plant, so that in case of an emergency all the men can quickly be concentrated in one spot. Workmen use copper hammers only, to avoid the hazard of sparks from steel hammers.

Permanent high pressure steam lines are connected directly into the stills and other apparatus used in the manufacture of this plant's products, and also into the storage tanks located in the yard, so that in case of fire it can be smothered instantly by steam merely by turning a valve. There are valves for this purpose both inside and outside the buildings. Should conditions be such that the men inside the building could not turn on the steam before they make their escape, they could turn it on by a valve located on the outside wall. And in case

Fortune is not content to do a man one ill turn. Bacon.

impracticable or too risky because of the heat e men to climb the ladder and reach this valve outside wall of the building, there is a handle 50 feet away from the building which works a which will open the steam valves

ther fire protection is the insertion of a fusible the chains used to hold the window of the building open In case of fire this link would melt and window would drop into closed position, stopping aft from outside which might fan the fire, and ting the spread of the fire to other structures

le the steam spray system is the chief fire pro chemical and water fire extinguishing apparatus alled at convenient places as auxiliary protection

of the dangerous tasks here formerly was repair gas lines high up on the huge crude stills where ngredients of the products of the plans are dis out of the crude waste mixture received from the ating gas manufacturing plants It is frequently ary to send men high up to make repairs or adjust on the lines and valves Often there are fumes which would overcome a man, and if he were ladder he would fall and be killed or seriously in

To overcome this the safety committee of the devised and built a carriage out of an ordinary 100 steel oil drum The top of the drum is removed, rass steel straps are riveted onto the upper rim drum is slung onto the hook of an overhead crane straps, and can be moved anywhere that work to be done Should a man be overcome, it is able for him to fall out of the drum, and he can then be lowered by his companions and resuscitated

en tank cars are cleaned on the railroad siding at last the man going into the tank is fitted with a harness like affair to which is attached a life While the man is in the tank another man is sta on top of the car at the other end of the rope, able to keep track of the man inside, and in he is overcome it is an easy matter to drag him revive him it is not necessary to risk another sending him in to find the first one

ever men are to work inside one of the boilers plant the pipes at the rear are first disconnected one not knowing there are men in the boiler make the mistake of turning a valve and admitting to the boiler

plant with all its extra-hazardous operations through the entire year 1921 with only one lost time at a case of an injured finger causing lost time at two weeks

were next to the West Shop and the West Meter One of the first things noticed here was that aways all had a light under the bottom stair A glass in front of the light prevents a person's feet catching under the stair tread These lights had installed to prevent tripping and falling As they under the bottom step the lights besides illuminating aways generally show a person coming up or that it is the first or last step, and eliminate trip ping and slipping from the common cause of missing the first or last step

All tools used in the shops are inspected daily by the foremen, and barred or otherwise defective tools weeded out for repairs or discard An additional inspection of tools is made once a month by the safety department of the company, and the Bureau of Safety

In the garages, too, safety is receiving serious attention For example, at the suggestion of the chauffeurs themselves, a white line is painted on the ground six feet outside the garage doors, and another is painted six feet inside the doors Every machine coming in or out of the garage must come to a complete stop at these white lines while the chauffeur ascertains whether or not another car is coming the other way At one garage instead of painting these lines two rows of white brick have been laid in the pavement, eliminating the necessity for frequent repainting

Lessons in public safety are given the drivers and they are taught that they must have their cars in such control as to avoid accidents even when the accident would really be the fault of a pedestrian or another driver

Everywhere you go on the People's Gas properties manufacturing plants shops or garages you are impressed with the liberal use made of both National Safety Council bulletins and home made safety bulletins Permanent safety signs also are conspicuously displayed in each department Each of these painted signs points out the specific hazards of the particular department in which it is hung And these signs are read John Johnson, assistant superintendent of the Division Street Station, described the interest the men take in the bulletins and signs as follows

"One man will start to read a bulletin pretty soon another man follows suit, and in a few minutes a whole mob has congregated in front of the board reading the bulletins, and discussing among themselves the lessons portrayed"

A fine example of how the men of this company work for safety is Charlie La Berge engineer in the People's Gas Building the large vacuum operated by an auxiliary company of the People's Gas Light and Coke Company Mr La Berge was formerly a plant man and had learned the value of safety work in the gas business So when he came to this building and took charge of the boilers engines refrigerating plant water drainage system and other machinery connected with the operation of this building and the heating of a dozen other large buildings supplied with steam by this one he applied his plant safety knowledge here In less than one year he has seen to it that practically every thing which could do damage is guarded And still he is not satisfied he is always on the look out for more things to guard and when he finds them he immediately acts to take care of them

The People's Gas Light and Coke Company has been doing safety work for many years although the present safety organization was not established until 1916 In spite of the so called reductions made in the personnel

years, the further reductions shown in the following comparison of the records of 1920 and 1921 is a creditable one:

	1920	1921
Number of fatal accidents	3	2
Number of disability accidents	344	288
Total number of accidents	830	641
Percentage of employes injured	16.86	14.47
Average number of days lost per 100 100 employes	107.4	100.4
Total number days lost	5,289.5	4,619

The People's Gas Light and Coke Company's safety organization places the responsibility for safety not upon one man, or a group of men—but on every man connected with its operations. Executives, foremen, workmen—all are part of the safety organization. Each plant and shop has a safety committee. These committees have intermediate committees representing the groups of departments engaged in the same sort of work. The intermediate committees pass on suggestions that come from the station and shop committees, and turn over to the safety engineer and the central committee on safety such suggestions as need the approval of the management.

It is from the plant and shop safety committees—from the men actually on the job that the majority of the safety suggestions come. Most of the safety measures mentioned in this story, and many others, originated in these safety committees. These committees have proved to be the most prolific source of safety ideas the company has.

In Mr. Beaumont's office I was shown sheafs of minutes of these safety meetings—all crowded with safety suggestions, which had been brought up at the meetings which are held at each plant once a month. The suggestions concern a wide variety of matters—installation of new equipment, improvements for present equipment, repairs about plants such as walkways, railings, and so forth, housekeeping conditions, protection of public around locations where gas company street men are working, and so on endlessly.

It is upon this wealth of safety ideas that the gas company draws for the safety measures it puts into practice. It is upon the imaginations of all its men that it depends for ideas to protect themselves and the general public. The meetings fairly crackle with the suggestions of the men from the gas houses, the streets, and the drivers' seats of trucks and tractors. And there could be no better source of safety ideas than these men. They are sincere and earnest—they know that the safety work is for them—and they are reducing their accidents year by year.

THE PACIFIC COAST WAY

SECTIONAL reunions have become an established feature of the Pacific Coast Gas Association's annual program of activities. It is the custom to hold one in San Francisco, one in Los Angeles and another in Portland, Ore. The Association, in its membership, embraces every phase of the gas industry on the Pacific Coast, from the public service corporation, manufacturing and distributing gas to consumers, to the manufacturers and salesmen of gas appliances. At these reunions, therefore, there are gas men from every part of the Pacific Coast territory, the best representations in point of number, of course, coming from the three central points named.

The first sectional reunion of the present season was recently held at the Pacific Gas and Electric Company's gas industrial laboratory in San Francisco. This took the form of a get-together dinner, with a program of entertainment and instruction.

At this industrial laboratory, every kind of gas appliance is displayed using gas as an industrial fuel. It made, therefore, a unique setting for a gathering of the kind.

About 150 members assembled and discussed an appetizing menu prepared on the premises, one of the hotel ranges on exhibition being called into requisition for the purpose.

Henry Bostwick of San Francisco, President, was in the chair, while the program of entertainment was under the direction of W. M. Henderson, the Association's able and energetic secretary.

Two speakers from outside of the Association were on the program. Mr. Eustace Cullinan, a well-known attorney of San Francisco, who delivered an able discourse upon proposed legislation affecting the interests not only of the light and power corporations of the State, but, also, the people of the commonwealth themselves, and in emphatic terms he urged the people of California not to be led into errors of political judgment such as had been responsible for the unfortunate conditions in North Dakota and elsewhere.

Mr. Charles W. Duncan, advertising manager of Foster and Fleiser Company, himself a well-known artist, a lecturer at the State University, and generally recognized as an exponent of the doctrine of color, made a very original talk upon color and its effect, through the eye, upon the mind and the energies. Mr. Duncan is the master of his subject, and his address was listened to with intense interest.

Following these speakers, Mr. Fred Pelle of the gas industrial department of "Pacific Service," gave a remarkable demonstration of burning gas in an open flame submerged in a tank of water. This experiment was made possible by the use of the Kemp premixer. The tank used for the purpose had a glass slide, so that the burning gas could be observed by the spectators.

An original industrial gas burner was used and the apparatus started. After the burner warmed up, it was plunged into the water and held at a depth of 10 to 12 inches. It continued to burn all the time it was in this position, the products of combustion passing up and escaping at the surface of the water. The lights of the room were extinguished and the effect was most spectacular, the reflection of the flame upon the water giving it a phosphorescent appearance. Altogether, it was a most interesting demonstration.

Men's business here is to know for the sake of living not for the sake of knowing.—Frederick Harris

AROUND THE BELT

New Wells, New Pipe Lines, New Contracts, Additions and Extensions. A Fund of Valuable News Gathered for the Journal Through Many Sources.

TRADE PERSONALS

Clinkscales, J. H., recently became Natural Gas Conservation Officer for the gas and oil fields near Ponca City, Okla., lately opened up.

Curry, J. P., Agent for the United Gas Company, Sharon, Pa., is away from his post on three months' leave of absence on account of ill health.

Emmert, W. B., formerly President of the United Central Oil Corporation, has been elected President of the White Oil Corporation, which has absorbed the former concern.

Fairchild, F. A., of the Meadville, Pa., office of the United Gas Companies is at present Acting Agent at the company's Sharon, Pa., office, during the absence of J. P. Curry, who is away on leave of absence.

Ferris, R. B., it is reported, has purchased from E. C. Clay the gas interests of the Shaffer County Gas Company. Mr. Ferris has been connected with the First National Bank, Drumwright, Okla.

Fisher, Harmon F., has been appointed Engineer for the Research Division of the American Petroleum Institute.

Hagan, O. C., of the Ohio Fuel Supply Company, Columbus, Ohio, has returned to his desk after a month's vacation in Florida and Cuba.

Pearson, H. B., is now President and Managing Director of the Canadian Western Natural Gas Company, Calgary, Alberta.

Rainsford, Capt. Ralph, has been appointed to the post of Chief Engineer of the Philadelphia Company, Pittsburgh.

Reichard, C. W., is now representative for Lee C. Moore & Company in the Northern Pennsylvania territory. Mr. Reichard's headquarters will be at Butler, Pa.

Uhlenhaut, F., has resigned as Chief Engineer of the Philadelphia Company, Pittsburgh.

NEW FRANCHISES

ARKANSAS—*Alma*—E. K. Hale has been granted a franchise to establish a distributing system in this city. The gas will be brought from the Kibler field.

OKLAHOMA—*Pauls Valley*—This town, as well as Purcell and Wynnewood, have granted a franchise to the Cozart Gas Company of Blackwell. The gas will be piped from the field near Elmore City, Garvin County.

ITEMS OF FINANCE

NEW YORK—*New York City*—Stockholders of the White Oil Corporation recently approved the merger of its interests with the United Gas & Electric Corporation. The White Oil Corporation by this consolidation also acquires the properties and assets of the United Central Oil Corporation and its subsidiaries, previously owned by the United Gas & Electric Corporation.

In consideration of these properties the stockholders of the White Oil authorized an issue of $1,500,000 8 per cent cumulative preferred stock and the transfer of this stock to United Gas & Electric in addition to 170,000 shares White Oil common and an option for one year on 100,000 shares additional common stock.

P. J. White, now president of the White Oil Corporation, is to be chairman of the board of the consolidated company and S. W. Emmert, former president of the United Central Oil Corporation, is president of the White Oil. The headquarters office of the company will be in Houston, Tex.

PENNSYLVANIA — *Pittsburgh* — Report of the Union Natural Gas Corporation and affiliated companies for 1921 shows a net surplus of $533,338. Total operating revenue is shown as $7,350,149; operating expenses, $6,103,048; other income, $261,271; interest, $134,882; profit and loss credit adjustment, $143,847; dividends, $984,000.

TEXAS—*Houston*—The Houston Gas & Fuel Company is offering for sale $1,200,000 refunding and improvement first mortgage gold bonds due 1932 at 91 and interest. The securities will yield around 6.17 per cent.

To persevere in one's duty and be silent is the best answer to calumny.—Washington.

INCORPORATED

COLORADO—*Rocky Ford*—The L. & C. Oil, Gas, Mineral Development Company has been incorporated by G. M. Coffman, J. B. Tilley and L. F. Tilley with a capital stock of $50,000.

TEXAS—*Westbrook*—The Westbrook Oil & Gas Company has been organized here by J. O. Brown and associates. The concern is capitalized at $100,000 and was organized to drill one or more tests in the Mitchell County field, near Westbrook, nine miles west from Colorado.

Mr. Brown is president and treasurer of the organization and T. E. Hodges is general manager. A. L. Buford is to represent the company as field manager. General offices are to be maintained at Westbrook.

WEST VIRGINIA—*Grafton*—The Weathy Oil & Gas Company has been incorporated with a capital stock of $25,000. Those named as incorporators are: H. W. Tobias, John R. Thayer, P. H. McGrady, J. Guy Allender, F. S. Suddarth, Grafton.

Logan—The Milton Oil & Gas Company, capital $50,000, has been organized by Miller Farley, Clyde Scaggs, Logan; R. H. Stewart, Milton; G. H. Marting, Pineville, Ky., and Q. L. Stewart, Madison, W. Va.

PER CUBIC FOOT—RATES

NEW YORK—*Batavia*—The Republic Heat, Light & Power Company, serving this city and other towns and villages of Western New York, has increased its rates from 55 cents net to 70 cents per thousand.

OKLAHOMA—*Creek County*—A rate of 40 cents per thousand is now in effect with the Creek County Gas Company and the Tippett Pipe Line Company in selling its product to farmers located along the lines of both companies. The previous rate was $1.00 for the first thousand, and 35 cents for each additional thousand.

Garber—The Garber Gas & Fuel Company has been granted permission to increase its rates from 50 to 75 cents per thousand.

Skiatook—The Skiatook Gas Company has been granted permission to increase its rate for domestic uses from 40 to 50 cents per thousand, while the industrial rate will be 30 cents per thousand. This action followed the making of a five-year contract by the Skiatook Company with the Owen Osage Gas Company for sufficient gas supply to take care of the needs of local customers.

Stillwater—A new rate of 40 cents per thousand has been adopted by the Mullendore Gas Company.

GENERAL

CALIFORNIA—*Los Angeles*—A company to be known as the Pacific Engineers has been formed by C. O. Nordenson, former General Manager of the Duquesne Burner Service Company and the Gas Combustion Company, O. E. Freeman and F. S. Bitgood.

COLORADO—*Meeker*—Natural gas produced from wells located in the White River section, twenty miles from this place, is to be used for the manufacture of carbon black, it is stated. Eastern capital is financing the undertaking, according to report.

KANSAS—*Linwood*—A well estimated to have a capacity of 3,000,000 cubic feet was brought in on the Harbough farm, near this place, at a depth of 689 feet. It is said that the gas will be piped to Linwood and Bonner Springs.

KENTUCKY—The use of natural gas for the purpose of manufacturing carbon black has been prohibited in this State by act of Legislature.

Red Bush—It is reported that the Williams Oil, Coal & Gas Company is closing up its affairs for the purpose of dissolving the company.

LOUISIANA—*Monroe*—No. 2 well, drilled by the United Oil & Natural Gas Products Corporation in section 17-20n-5e, near Perryville, has been completed and is estimated to have a capacity of 18,000,00 cubic feet.

Morehouse Parish—The United Oil Company in No. 2 on the Harris tract, section 17-20-5c, is reported to have 24,000,000 cubic feet of dry gas at a depth of 2,211 feet.

Refugio—The Pratt-Hewitt Oil Company has completed a 20,000,000-foot gasser in its No. 1 well near Woodsboro, at a depth of 2,415 feet.

Webster Parish—Lloyd Harris and associates have completed a well in section 34-23-11, and report that it is good for 10,000,000 cubic feet at 2,695 feet.

MONTANA—*Missoula*—The Bitter Root Oil Company reports oil and gas in a well drilling south of this city, at a depth of 1,000 feet.

NEW YORK—*Chautauqua County*—The Dickinson Fancher Peek Company recently brought in a 12,000,000-foot gasser at Abbey, three miles south of Forestville. The same company also completed a 6,000,000-foot gasser in the same field several months ago, the production of which has been contracted for by the Iroquois Natural Gas Company.

Perry—The Pavilion Natural Gas Company, it is reported, has announced its intention to pipe gas from wells located at Danville, owned by the Newfield Gas & Oil Company, to connect with its line at Mount Morris, a distance of fifteen miles, thus enabling it to furnish Warsaw and Perry with natural gas service.

Try and be right as well as sincere. Haweis.

Columbus. According to figures compiled by Public Utilities Commission, the average rate of gas charged in the State is around $1.00 per while the average rate charged for manufac is $2.27 per thousand

County. In the northeast quarter of section township the Charters Oil Company has shot test on the Robert Wolf farm. It is pro ght barrels a day. The well formerly was a drilled into the Clinton sand

County. It is reported that leases have been considerable acreage in Ripley and Fairland by C. L. Becker, a representative of the Pure company

a. The Keener Oil Company in its No. 2 has a good gasser on the Miller farm in Inde township. The gas was struck in the Maxon

County. In Liverpool township the Ohio Fuel company in No. 2 on the George Harvey farm, is a light gasser

ton. The Ohio Fuel Supply Company reports ase on the Shepherd farm north of this place ame on the Keener sand

County. In Bruch township the I. I. & Gas Company's second test on the Dozer reported a good gasser

same district the Swingle Oil & Gas Company completed a good gasser on the Joseph Carleton

Jefferson. In Grandview township, Marietta Marietta interests completed a 1,000,000 on the Charles Brooks farm on Sheets Run

County. In Brown township, the Ohio Fuel drilled a light gas well in No. 2 on acres section 27

Ohio Gas Company has a light gasser in Workman lease and is drilling No. 2 on farm

Blair and others have a gas well with a 275,000 cubic feet in No. 1 on the 125 acres section 4

County. In Congress township Brinkerhoff a light gas well on a test on the Winter 24

McMahon. The Cooper Gas & Fuel 500,000 cubic feet per through leakage. In granting charge 75 cents per thousand Gas in treated the company report to its the waste

County. The Western States Land & Develop in section 22 27 In Deer drilled 14,000,000 cubic feet of gas at 2,400 feet gas was 1 has been muddied well is reported to

The production of the Schermuhl No. 1 well drilled by the Western States Company, which was 10,000,000 cubic feet at a depth of 2,500 feet when it was brought in, shortly afterward dropped to 1,000,000 cubic feet. No. 2 well on the same lease came in at 10,000,000 cubic feet at a depth of 1,265 feet and dropped to 10,000,000

No. 1 well of the same company in section 27 27-3 came in with 5,000,000 cubic feet and has dropped to 2,000,000 cubic feet per minute. This is at a depth of 1,265 feet

No. 1 well of the Coast Oil & Gas Company section 26 27 3, had an initial production of 5,000,000 cubic feet dropping to between 7,000,000 and 8,000,000 cubic feet. No. 2 of the same company in this section dropped from 8,000,000 cubic feet to 6,000,000 cubic feet. This well was drilled to a depth of 2,400 feet

Lawrence. No. 2 well completed by the Victor Oil Company in section 25 1-6-8 on the Cox farm is reported to be good for 60,000,000 cubic feet

Ottawa County. No. 1 Barnett of the Atlanta Oil Producing Company in section 34 11 11 has been completed at a depth of 3,000 feet and is reported good for 3,000,000 cubic feet

The Atlanta Oil Producing Company has completed No. 1 Barnett section 34 11 11, as a 10,000,000 foot gasser

Ottawa County. Kimbles & Meers No. 1 Beumer section 11-13 12 is a 15,000,000 foot gasser from 2,082 64 feet

In the Moores district V. I. Reelly and others completed No. 1 Lemonte section 18 13 14, as a 3,000,000 foot gasser from 2,650 58 feet

The Ozark Drilling Company had 1,500,000 feet of gas in No. 2 Ida Smith section 21 13 14 sand 651 feet

West of Okmulgee Kimbles and others No. 1 Preston section 11-13 12 is an 18,000,000 foot gasser from 2 1,065 feet

The Transcontinental Oil Company completed No. 1 Tiger east of the Lowry pool in section 33 11 12 and the well is making 1,000,000 feet of gas from 1,345 47 feet

Pawnee Co. No. 1 test of the Mackie Weeks interests on the Eastman lease drilled out 2,000,000 cubic feet of gas at 815,850 feet. The gas was muddied out and the well is drilling in the 2,100 foot sand

Shawnee. The Shawnee Gas Company is reported has entered into a five year contract with the Ohio Osage Gas Company for gas supply. In order to further improve its service the Shawnee Company is planning to construct a 4 inch pipe line at an the Ohio Osage gas pressure

PENNSYLVANIA. Cross & Nes have completed a good gas well on the Pine Hollow field on the Foster tract

County. In Kiskiminetas township the West Virginia Oil & Gas Company drilled in well No. 2 on the H. H. McNay farm and have a gasser

Politeness is the art of choosing among one's real thoughts.—Stevens.

In the same township, the Scott Oil & Gas Company has started to drill a test on the Mary Scott farm.

In Alleppo township, the Finch Oil & Gas Company has completed a test on the George McVey. It is a gasser in the Gordon sand.

In Wayne township, the Peoples Natural Gas Company's test on the John Hask farm is a gasser in the Bayard sand. The same company's test on the J. T. Knight farm is a light gasser in the fifth sand.

The Pettit Oil & Gas Company has a gasser at a test on the John E. Pettit farm.

The Carnegie Natural Gas Company at a test on the Hester Stephenson farm, Cumberland township, reports a gasser estimated to have a capacity of 4,000,000 cubic feet per day.

TEXAS—*Annona*—A block of land has been leased in this section by the Riggins Oil & Gas Company of Comanche, Okla. The first test well is now drilling.

Carson County—A well of unusual production was recently completed by the Gulf Production Company in this section. If it is said that the well at 3,250 feet is producing 140,000,000 cubic feet, and that a still larger yield is possible. The flow is shut off and drilling to a lower depth is proceeding.

Dallas—According to report, the Lone Star Gas Company will install 30 additional gas compressors in the fields from which it derives its supply where the pressure is low.

Eastland—A gasser estimated at 2,500,000 cubic feet has been completed by the Middletown Texas Oil Company. The gas will be put through the absorption process for its gasoline content.

Fort Worth—The Humphreys Oil Company in its No. 1 test on the Cole tract, has developed a large flow of gas. The company is drilling several other wells in this field.

Marshall—The Industrial Gas Company has a large gasser in No. 1 in the Bethany Elysian gas field.

Panhandle—Local residents will shortly enjoy the conveniences of natural gas service, the Humble Oil & Refining Company having entered into an agrement with the city to this effect. The company will charge 40 cents per thousand for its product.

Paul's Valley—It is reported that M. M. Sweetman of Kansas City, Mo., has leased 50,000 acres of proved territory near Paul's Valley.

Pecos—Gas in commercial quantities has been developed in a drilling near the city, and it is expected that it will be piped to the city for domestic use in the near future.

WEST VIRGINIA—*Boone County*—On Alum fork of Boone creek, Union district, the Hope Natural Gas Company has a fair gasser in the Big Lime at a second test on the J. M. Boyce farm.

Calhoun County—In Sherman district, Park Bowser has a gasser good for 500,000 cubic feet a day in the Big Injun sand at a test on the E. B. Burrows farm.

Doddridge County—The Continental Oil & Gas Company completed a test on the John A. Davis farm, located in Greenbrier district. It is a gasser in the Gordon sand.

In West Union district, the Columbia Carbon Company's No. 42, Lewis Maxwell, is a gasser in the Big Injun good for 1,500,000 cubic feet.

Gilmer County—In Center district, the Hope Natural Gas Company's test on the I. N. Hardman farm is a gasser in the Maxon sand, good for 1,000,000 cubic feet a day.

The Hope Company has also completed a gasser on the Percy Arbuckle farm, and is drilling its second test on the J. D. Smith farm.

It is reported that the No. 7 well of the Hope Natural Gas Company on the Drusella Hardman farm is a gasser in the Maxon sand.

In Center district, J. A. Rusmisell and Company have completed a second test on the J. P. Norman farm. It is a gasser in the Maxon sand.

On Camp Fork of Horn creek, Troy district, the Hope Construction & Refining Company has completed a second test on the Allman-Hall farm. It is a gasser in the Maxon sand.

In Center district, the Hope Natural Gas Company's tests on the Charles Swisher and J. D. Smith farms are both gassers in the Maxon sand.

In the Troy district, the same company's test on the H. I. Allman farm is a gasser in the Maxon sand.

Kanawha County—On Mud Lick, Big Sandy district, the Peerless Carbon Company's No. 3 well on the Osborne heirs' tract is showing for 1,500,000 feet of gas in the Big Injun sand and a slight showing of oil in the Weir sand.

Lincoln County—In Carroll district, the Huntington Gas & Development Company has a Big Lime gasser at a test on the J. M. Nida farm.

Marion County—In PawPaw district the Randall Gas Company's test on the Thomas J. Floyd farm is a light gasser.

In the same district, the Owens Bottle & Machine Company has a gasser in the Big Injun and 50-foot sands at a test on the James Layman.

Monongalia County—In Clay district, the Hope Natural Gas Company's second test on the Stephens heirs' farm is a light gasser in the fifth sand.

Ritchie County—In Union district, the Carnegie Natural Gas Company's test on the Charles Ward farm is a gasser in the Big Injun sand.

In Union district, the Hope Natural Gas Company has completed tests on the L. A. Prunty, Amos L. Huff and J. H. Oldaker farms. All are gassers in the Big Injun sand.

In Murphy district, the Hope Natural Gas Company's test on the John Coyle farm is a gasser in the Big Injun sand.

Don't think of all the things money would buy—if you had it.

on district the same company has a gasser in
njun sand at a test on the J M Boyce farm

on district, on the Prunty heirs' farm, the
tural Gas Company has completed the No 4
ch is a gasser in the Big Injun sand

district, J B Yates & Company's test on the
ddler farm is a gasser in the Big Injun sand

same district, John Deem has a gasser in the
at a second test on his own farm.

er & Sellers drilled a test on the William Jewel
ugh the Big Injun sand, it is a light gasser

on district, the Hope Natural Gas Company's
e Elizabeth farm is a gasser in the Berea grit

nt district, the Hemselman Drilling Company's
he Scott and John Satterfield farm has been
l in the Injun sand and is a small gasser This
cated 800 feet northeast of production on the
ogdin farm in the Goose creek pool

ne creek Union district, the Carnegie Natural
pany has a 7,000,000 foot gasser in the Big
d

County The Wiser Oil Company has com
gasser on the James Campbell farm, the gas
nd in the Big Injun sand

County A good gas well has been completed
ns Quick Oil Company on the J A Kelly farm
district This well is making 500,000 feet in
gritt sand

MINE, Natrona County In the Poison Spider
New York Oil Company is reported to have
l a gasser estimated at 35,000,000 cubic feet

KLA Calgary In the Okotoks field, southwest
rs Royalite Nos 1 and 2, section 6-20-2-5 are
gas to the Canadian Western Natural Gas
line with a production of 3,000,000 to 4,000,000
t a day No 3 is drilling The gas is first
n the Royalites gasoline absorption plant and
ual gas delivered to the pipe line under artificial
ion

THE HIGH-TOP RANGE

recently had a very interesting "self conducted"
tour through the plant of the Cooperative
Stove Company of Cleveland Ohio The com
pany's sales manager Mr K D Hutchinson,
he speaking trumpet metaphorically speaking,
ented from time to time the especial features
lested us to observe

e we had finished our trip Mr Hutchinson was
to be a bit [illegible] in view of the fact that the
l excellence [illegible] the plant and that were
served in their new splendid line of gas ranges
were so many that it kept him almost constantly calling upon the services of his usual cards

A while since the Cooperative Company gave itself to the manufacturing of combination gas and coal-ranges, and a very large line of coal stoves for both heating and cooking purposes The company, however, did not build a full gas line either in efficiency, features, or fittings, like its present line, one that would have stopped a passerby without even a word from a representative

Today things are very different, and Mr K D Hutchinson, who was at one time sales manager for Rathbone, Sard & Company and thus the possessor of an excellent knowledge of gas range construction as well as gas salesmanship came over to the Cooperative Company, and with the help of other men, possessing years of experience especially factory practice, has developed a line that in design features, workmanship and finish will surely cut a very prominent figure in the field

These ranges, called "Grand," by trade-name, embody a heat control for the governing of the oven-heat during baking and roasting, one of the very latest features to be found on gas ranges, and likewise a height of cooking top, measured from the floor, that is in line with the departure which is found in the "Vulcan" ranges of Wm M Crane & Company, and which in turn is in line with the latest practice in kitchen sink installations whereby a higher measurement from the floor has become popular

It will thus be seen that much that is "latest" is found on the "Grand" ranges, accompanied by a larger warming closet beneath the cooking top, the extra space being gained by the raising of the cooking top to the higher level

In another article we referred to the fact that, *it is the appliance that sells the gas* and surely it that be so, then with the exceedingly perfect and beautifully designed and attractively finished gas appliances that have been standard upon the market, and with newer ones making themselves known appliances so perfect and attractive as, for instance, this new line there should be no question as to the ability of a gas man to continue to sell his product

Human life is more governed by fortune than by reason. Hume.

Co-Operation and Conservation

IT is impossible to accomplish general conservation in the gas field without co-operation; therefore we couple these two words as the Alpha and the Omega in the realm of this exceedingly necessary phase of the gas business in the United States.

There has been continuous waste from the well to utilization in the natural gas field, and there ever will continue to be, but with co-operation, conservation will surely increase to grow and waste to decrease.

A very important conference has just been held in Washington, D. C., at the Bureau of Mines. The assemblage was especially notable in view of the fact that in attendance were men representing many millions of capital invested in natural gas interests of the first magnitude.

These men came from the north-west, west, south-west and east, thus many types of conditions were described, explanations given and remedies told of and suggested.

It is hoped among other results that greater co-operation may be accomplished between oil interests and the interests represented by natural gas, for at present and in the past there has been in some of the fields a sad lack of that element.

Much stress for some time has been laid upon educating the public to be more careful in not wasting gas. Higher rates, advertising, addresses, leaflets, and what-not have been employed in the effort, yet while the waste of gas at the domestic appliance is a considerable factor, even a more vital one is waste in the field, on their own properties and on their lines, by gas and by oil companies.

Emphasis was placed at the conference upon the need for educating the field and all other employees, and some said, *"Ourselves,"* (referring to the gas companies), in the *dollar-and-cents* value of the gas, and the vast money losses that even present waste runs into. Thus to influence against a continuance of waste beyond that which *cannot reasonably be prevented.*

At the conference it was freely stated that all the way up and down the line in gas companies, between gas companies, and also between gas and oil companies, there should be greater co-operation in order to accomplish major conservation. The Bureau of mines freely offered its co-operation and likewise the gas company management offered theirs. If all are sincere to the extent expressed great results are in the making.

There has long been notable co-operation through the Bureau of Mines under its recent director Dr. Van Manning, through the well directed efforts of Mr. Samuel S. Wyer of Columbus, Ohio, through the efforts of the Natural Gas Association, through individual gas companies' helpfulness, and through the columns of the NATURAL GAS INDUSTRY magazine and other media, all of which co-operation has been the means of laying the foundation work so vastly important upon which the proposed superstructure of gas conservation is to be builded.

A full and complete report of the conference at Washington will be found on other pages in this issue.

Lucius S. Bigelow

THE NATURAL

GAS INDUSTRY

TRANSPORTATION GASOLINE PRODUCTION DISTRIBUTION

SCRIPTION— IN THE U S

VOLUME 16
THIS NUMBER 5

CONTENTS FOR MAY, 1922

PUBLISHER'S NOTICE

PUBLISHED MONTHLY

Advertising Copy should be in by the 5th of month previous to issue

SUBSCRIPTION RATES: In the United States [illegible] foreign countries [illegible] Canada [illegible]

ADVERTISING RATES on request

CORRESPONDENCE IS SOLICITED from all those interested in Natural Gas and related industries

Buffalo Long Distance (Day) Bell Telephone, [illegible]

Cable Address "Publight, Buffalo"

Address General Correspondence, Editorial and Advertising Matter to Central Office

PUBLISHED BY

PERIODICALS PUBLISHING CO.
BUFFALO, N.Y.

Lewis B. Beeman, President and Editor
Hugh S. Beeman, Vice President
A. Cash Beeman, Secretary

Entered as second class matter December 1 [illegible] at the Post Office at Buffalo New York under the act of March 3 1879

STATEMENT OF THE OWNERSHIP MANAGEMENT CIRCULATION, ETC REQUIRED BY THE ACT OF AUGUST 24 1912

[illegible] The National Gas Industry published [illegible] at Buffalo, N. Y., State of New York [illegible] April 1922

Publisher Pub. Co., Buffalo, N. Y.

Editor and Business Manager, Lewis [illegible]

Owners: If a corporation give its name and [illegible] names and addresses of stockholders holding [illegible] per cent or more of total amount of stock. If not a corporation give names and addresses of individual owners.)

Publisher Pub. Co., Buffalo, N. Y.

[illegible] Buffalo, N. Y.

Known bondholders, mortgagees, and other security holders, holding 1 per cent or more of total amount of bonds, mortgages, or other securities: None

Average number of copies of each issue of this publication sold or distributed through the mails or otherwise, to paid subscribers during the six months preceding the date shown above: (This information is required from daily newspapers only.) [illegible] monthly

HARRIS S. BIGELOW, Vice President

Sworn to and subscribed before me this [illegible] day of April 1922

W. P. CANDY

My commission expires March [illegible] 1923

CONTENTS OF THIS ISSUE

FROM THE EDITORIAL MAIL BAG

SLIDE RULE PRINCIPLE

[illegible] NLY observing in an advertisement of Keuffel & Esser Company, of Hoboken, N. J., makers of slide rules etc., an illustration of one, slide rule in hand, the thought came to us of g this illustration to certain conditions in business. We lost sight of the illustration and are using it g [illegible] the thought that while the slide rule principle is exceedingly valuable, in fact almost indispensable in certain lines of work and calculations, even the slide rule principle cannot be looked upon as all essential, or even desirable in order to arrive at certain types of determinations.

If a manufacturer were to calculate the strength of his institution by the number [illegible] of his payroll, this would be the slide rule [illegible] If never no thinking manufacturer, or eff[illegible] engineer would for one moment thus calculate [illegible] the ultimate result, namely, conv[illegible] would doubtless be exceedingly disap[illegible]

[illegible] real and true method of determining values, [illegible] manufacturer must recognize this as being [illegible] determine the production qualifications of [illegible] each piece of mechanism of the fa[illegible] the plant etc.

[illegible] be an exceedingly incompetent manufacturer [illegible] engineer who would set down upon a sheet showing the number of employes, the number [illegible] the number of shapers, the number of drill [illegible] the number of planers etc. and the area of [illegible] the manufacturing plant and then say be[illegible] there are four hundred employes and because [illegible] this shop number two hundred and because [illegible] the shop measures two acres, that the [illegible]

[illegible] manufacturer or efficiency engineer who would [illegible] has naturally taken the way of least re[illegible] He has not undertaken to find out those things [illegible] important but that require some time [illegible] a little thought on the slide rule prin[illegible] as said that two times three makes six or three [illegible] and therefore the results must be

In many institutions when it comes to the matter of advertising, the slide rule principle is in favor, and in some institutions with some advertising managers is considered the all important, while in other institutions the manager or his advertising manager have advertising as he would have efficiency having it not upon any other foundation than that.

Managers and advertising managers of this type realize that the spending of a company's money for advertising is not a thing to be gotten through with in the shortest possible time with, if with at a competent knowledge of conditions but instead that all of the elements surrounding the publishing of advertising matter in magazines should be carefully and thoughtfully considered and looked into.

The expression that is frequently heard from men handling advertising is "Well that's out of the way." As though advertising were not an exceedingly important means to that all important end namely, the selling of the product. The old expression "Money makes the mare go" is just as true today as when it was first spoken and while much money can be made or lost in the works the great stream that feeds the ever demanding treasury finds its source on the sales side of the business.

It being therefore the case that the sales side is all important and it also being the case that the type of salesman and the selecting of salesmen of an institution are believed to be features of vital importance and to which much time and thought is given, so likewise the employing of the publicity medium should be just as carefully and just as thoughtfully considered for it is the salesman, is one of the cogs in the great wheel that turning out sales keeps the factory in motion.

If we were buying advertising and there were only two or three magazines in a field even though we were intending to cover half a dozen fields that might total eighteen or twenty publications we would never determine upon our advertising points by the slide rule principle. We would never in the world take a [illegible] statement on the slide rule principle even though we were to give attention to such statement but we would spend our money if we were the [illegible] we would spend the [illegible] money. If we were an advertising manager or a general manager we would [illegible] every publisher in the field we [illegible] and we should say. We would [illegible] a state[illegible] regarding the standing of our magazine in the field in which we [illegible] the number of years we have been publishing the average [illegible] per year during [illegible] years past [illegible] that appeared upon the books. We would ask what the percentage [illegible] display advertisements [illegible] the field which our particular line is designed to reach as compared with

It's the ability a man uses, not the ability he possesses, that regulates his reward

the percentage of display advertising applicable to some other section of the field that we would not care to reach. We would ask for a list of the articles appearing in the reading pages indicating the percentage applicable to that division of the field which we would wish to reach as compared with articles designed to supply information to some other division of the field that we did not care to reach. We should ask, how many columns or parts of columns these various articles occupy in order to determine the area of reading matter applicable to our division of the field."

As one of the essentials we should ask, "What especially notable work has your magazine done in the field," adding specifically, "recite any such." Also making it a point to ask the question, "How long has the present ownership published the magazine, and how long has your magazine editorship been intimately in touch with the field, and has your publisher an intimate acquaintance throughout the field of such nature as would lead the readers to have confidence in the publication and its policies."

The foregoing are some of the questions we would ask, thus avoiding the "snapshot," "make-it-snappy," "lets's get rid of this job", in other words, the slide rule principle, which should never be employed in the buying of anything, whether it be material, supplies, or advertising. In other words, the same principles should be employed as are employed where consistent means are in vogue looking to the employment of men. In other words, not the slide rule principle of mere calculation, but the principle of past showings, of present ability, of integrity, of earnestness of purpose, and of ability to make the earnestness of purpose an actual factor in accomplishing the end in view.

The slide rule is a wonderful estimator, but no one would buy services or quality in material, etc., by the slide rule. Why then adopt the slide rule principle in buying advertising? Instead employ those who have time enough to handle your advertising as it should be handled, and with that same degree of attention to the features of larger moment, even though it take time to arrive at conclusions rather than to quickly arrive at a determination by slide rule method.

THE best anodyne is work. You can always find some around your immediate vicinity; it is cheap, plentiful and efficacious. It is hard to understand why so many people are afraid to try it.

N. G. A. OF A. AT KANSAS CITY, MAY 15-17

THOSE two splendid caravansaries in Kansas City, the Baltimore and the Muehlebach, have naturally been chosen as headquarters of many of the leading gas men, though the convention sessions will be held in Convention Hall where the exhibits will be located. The two hotels indicated as notable leaders are immediately opposite one another, and it will be found equally convenient by those wishing to be at "headquarters" to lodge in one or the other hostelries. The rates for rooms in these hotels are as follows:

$2.50 to $3.50, single, without bath.
$4.00 to $5.00, double, without bath.
$3.50 to $9.00, single, with bath.
$5.00 to $12.00, double, with bath.
$7.00 to $10.00, rooms with twin beds.

However, even though headquarters will be represented by the capacities of two, not merely one hotel, the making of reservations should not be delayed, as naturally, though there are other Kansas City hotels available, the great majority will prefer to be at the Muehlebach or the Baltimore.

PROTECTION AND CONSERVATION.

A CERTAIN bill has passed both houses in the state of Kentucky and after passage it went forward to the governor for his action. It was bill 206 entitled, "An act for the protection and conservation of the supply of natural gas in the state of Kentucky, and wasteful use of such gas and the providing of penalties for the violation of such acts."

We are informed by our correspondent that the Louisville Gas & Electric Co. is accredited with being the sponsor of this bill which does not meet with the approval of a lot of oil men and others. These men claim to see in it, so called monopoly covering the product that the Louisville Gas & Electric Co. is said to depend upon, since the company draws a large part of its supply of natural gas from the fields in eastern Kentucky, gas that it sells to consumers in Louisville.

It is stated that according to the provisions of the bill, operators are prohibited from selling their gas except to a utility company from wells within a radius of ten miles of a pipe line.

Operators declare, as we have already quoted, that the bill is aimed at forming a monopoly and that it destroys an open market for their product. Officials of the Kentucky Oil Men's Association are accredited with the statement that if the measure becomes a law, it will retard the development of both gas and oil fields of the state of Kentucky. No doubt the Louisville company would point out quite the reverse.

Trying to find a short road to success would make good epitaphs for the vast multitudes of failures

)-OPERATION THE KEYNOTE

following well indicates the attitude of the overnment as displayed at the conservation onference recently held in Washington, be- een the United States Bureau of Mines al Gas Association of America, producers butors of the Mid Continent and eastern others interested in the subject of conserva-

ociations and producers representation re Washington in response to an invitation y the Bureau of Mines with a view to estab- rther cooperation between the natural gas and the Federal Government whereby to among two million five hundred thousand s consumers a greater economical use of nt

conference Secretary Fall promised the operation in all respects of the Department rtment

retary in his address stated

e duty of the government to go just as far n assisting our industries and certainly it is the Department of the Interior as I under help you in developing the natural gas in do not want the government in competition of its business men The government is in despite itself in oil and gas to some extent leasing law but we endeavor to conduct not to compete with but to assist those n the development of the industry"

g a natural gas conservation meeting called ag by the late Secretary Franklin K Lane s gas companies have been demonstrating t the proper methods of using gas in appli l particularly have emphasized the use of s under lower pressures

atural gas companies have been making ex s efforts to reduce leakage and secure the esults possible from the gas used for their ssary purposes and in this way considerable of gas have been conserved W B Way of the association, said The consumers ha l brought to their attention the folly of ir inefficient fixtures and the necessity s only those fixtures which will show reason nomical results Many cities also have con higher rates for gas in this way bringing heir citizens that gas is worth saving and s es notwithstanding the higher rates the has been able to get as good results for th per month as under lower rates"

nservation committee of the association will to devise means of reducing the huge of natural gas which are allowed to escape ling of oil wells and a second committee will plan to disseminate information showing how maximum results may be produced from the use of the gas The Bureau of Mines will cooperate closely in this work

Members of the association who attended the conference are W B Way, E J Egan, H A Quay, S W. Meals, G F Batchelor, John B Corrin, J F McKirdy, T B Gregory, J B Tonkin, Alfred Hurl burt and L B Denning president of the association all of Pittsburgh, Pa Raymond Cross and W O Walker, of Oil City, Pa, J D Creveling and Christy Payne, of New York, Charles Owen Canes, Kans H R Davis, Buffalo N Y, S S Allen, Jr, Colum bus, Ohio, J H Mason Chicago Ill, Karl F Griffith and F L Chase, of Dallas, Texas F R Curtin Jr., of Lima, Ohio, W W Freeman and H L Hoover of Cincinnati, Ohio John J McMahon of Cleveland Ohio; R K Tallant of Fairmont, West Virginia, J W Dana, of Kansas City Mo and representation of the Natural Gas Industry magazine

GASOLINE LOSSES BY EVAPORATION

A BULLETIN upon the evaporation loss of petroleum in the Mid Continent field, by J H Wiggins petroleum engineer has just been published by the United States Bureau of Mines It contains facts of much interest, for a detailed field investigation has shown that in one stage only of handling crude oil the volume of gasoline that evaporates is equal to one thirtieth of the country's yearly gasoline production, says the author This loss occurs during the few days that the oil is stored on the leases before being taken by the pipe line, and in one year in the Mid Continent field alone, it amounted to 122,000,000 gallons Large as it is it is only a part of the loss on the lease

Investigation has further shown that the gasoline in crude oil evaporates from one half to six tenths as rapidly as the same gasoline after being distilled and stored all evaporative conditions being the same

Many wastes in the oil fields are called necessary By this is meant that the cost of preventing the waste is greater than the gain through saving Evaporation losses have fallen here [illegible] but now they must be considered unnecessary In other words it is no longer economical to allow handling crude oil to permit losses through evaporation

In accordance with its purpose of seeking to conserve mineral resources the Bureau of Mines investigated the loss of gasoline by evaporation in the storage and handling of petroleum Inasmuch as most producers had not decided that their losses justified corrective measures and no evidence was available on the comparative losses in various stages of handling the oil, the investigation was limited to determining by experiment and observation the nature and magni-

tude of evaporation losses, where the greatest losses are, and the factor controlling evaporation.

The results of the investigation, as presented in this report, indicate that losses from evaporation are so large that they should receive serious consideration at once by the industry, which should make every endeavor to reduce them to a minimum. The Bureau of Mines is now making a supplementary study of methods of reducing these losses. The complete text of the finding may be had of the Bureau of Mines at Washington, D. C.

DEATH OF H. D. HILDEBRAND

MR. H. D. HILDEBRAND, President of the Hope Engineering & Supply Company, Mt. Vernon, Ohio, Pittsburgh and Tulsa, Okla., died Saturday, April 8, in the Johns-Hopkins Hospital, Baltimore. He was born in Wilmington, Delaware, and came to Pittsburgh in 1889.

He formerly was connected with the Hall Steam Pump Company and became associated with the Hope Engineering and Supply Company when it was organized in 1906.

Mr. Hildebrand was President as well of the associated corporations, The Hammon Coupler Company and the Hope Forge & Machine Company, Mt. Vernon. He was a member of the Natural Gas Association of America and the Natural Gas Supply Men's Association, the Engineers' Association of Western Pennsylvania and the American Society of Mechanical Engineers. The deceased was considered one of the best engineers in gas and air compression in the United States. He leaves his widow, Mrs. Zaidee S. Hildebrand of Mt. Vernon, and three sisters at Wilmington, Del.

Our personal touch with Mr. Hildebrand led us to esteem him highly indeed and it is with deep sorrow that we recount his death. He will be sadly missed in the industry.

REFINERY FACTS FOR FEBRUARY

THE 296 operative refineries in the United States ran a daily average of 1,361,000 barrels of oil through their stills during the month of February; this being 76% of their rated daily average capacity. The daily average run for the 291 plants in operation during February, 1921, was 1,340,000 barrels; an average daily increase of 21,000 barrels run to the stills is shown over February a year ago; so it appears from government statistics.

An increase of four plants in the number operating and a daily average increase of 42,000 barrels in capacity is shown in the totals for the month just closed.

Gasoline stocks total 818,500,000 gallons and show an increase of 112,800,000 gallons over the reserve the last of January. This is the greatest reserve in the history of the industry, topping by 18,000,000 gallons the previous high figure set in May, 1921. At the present rate of increase in storage it is possible that the billion gallon point may be reached in the gasoline reserve before the seasonal decline in stocks commences. The amount now in storage is 138,000,000 gallons more than on March 1 a year ago. Production during February totals 46,000,000 gallons less than for January but shows a 10,000,000 gallon increase over February a year ago.

HEAT TREATMENT OF ROCK DRILL STEELS

THE American Petroleum Institute through its Division of Research is co-operating on an Advisory Board to the U. S. Bureau of Mines and the U. S. Bureau of Standards in "the investigation of the breakage and heat treatment of rock drill steels and other steels and alloys subjected to similar impact stresses." The Advisory Board is composed of members of the following societies:

American Society of Civil Engineers.
American Society of Mechanical Engineers.
American Society for Steel Treating.
American Society for Testing Materials.
Associated General Contractors of America.
American Institute of Mining and Metallurgical Engineers.
American Welding Society.
Engineering Foundation.
National Research Council.

It was agreed at the meeting of this board on February 20, that a field survey should be immediately begun under the joint direction of the U. S. Bureau of Mines and the U. S. Bureau of Standards, the object of which is to prepare a report on the present practice in this country regarding the heat treatment of drill steels and the extent to which breakage occurs. Further action of the board will be based upon the report of this survey, work on which has already been started.

Big Gas Interests

Heads of Gas Interests Representing Millions of Invested Capital Tell of Their Methods at a Conference With the Chief of the Bureau of Mines

IR recent date H. Foster Bain Director of he Bureau of Mines Department of the In rior invited heads of extensive gas interests nd representation from the Natural Gas n of America to a conference he had plan a view to continuing the good work of gas n that his predecessors Hon Franklin K retary of the Interior and Dr Van Manning rector of the Bureau of Mines had inaugurat arther with a view of expanding that work unity presented or as opportunity could be e Mr Bain is a progressive man not simply tory type but of the creative class of men

nference was held in Washington at the thers and in his opening address Director for his Bureau "I hope that you will look e people who are trying to help rather than o are trying to regulate

untry has passed through a period of war lation but such has been repealed and the vernment steps back to its normal position federal police power whatsoever such now he hands of the states

ederal Government can do nothing and does to do anything in matters like this except to f to help On the other hand the Federal nt in a certain sense has gotten into business The lands of the West which were formerly now leased and the oil and gas lands are under lease so that the Department of the rts as trustee for the land owner in the d operation of gas wells oil wells and coal these lands The actual contact of that work this Bureau and we are now in a position you might call consulting engineers or repr es of the management on behalf of the land a considerable amount of gas and oil work is perhaps a new point of view and a more It has given us some very real and definite We have to consider the price of gas now h the same point of view that you do That e to get down to what is the fair price We ake serious thought of our recommendation he natural gas gasoline be taken out of the possibly can be taken out A good deal of hat comes off Government lands is rich in as gasoline and in efforts to conserve tha. we have to take serious thought of the effect that it has on the lessees in the matter of building plants We have had the finest cooperation in that particular The Midwest Company in the Wyoming fields is building a valuable plant and we hope to make a good saving out of that The waste of gas is continual It lasts from the very beginning of drilling in a field until the gas is finally burned in the cook stove All along the line there are chances of waste

In the limited time I have been with the Bureau my contact has been more with the field particularly in the West where and I think probably those of you who work in the West will agree with me your methods have not reached the high standard that I understand they have in the eastern gas fields and frankly I have been appalled at the waste in the field in the process of drilling and all around through the field The largest parts of the waste I have seen has come from the oil men who are not particularly interested in gas At the same time it is gas and it is gas which in a good many cases might be used and perhaps by working together we can get better results at the very beginning Beyond that when it comes to general education of the public that is something that you must keep on doing We can never say that the public has been adequately educated We will have to do it over and over

Away back fifty years ago they taught arithmetic in the public schools but they still have to teach it I took it in the schools but when my children come along they will have to teach them You will have to go and teach new people customers in the right way to use gas and the least wasteful way to use it"

[illegible]

Mr Harry [illegible] ing the Director said

As far as the [illegible] company is concerned our situation has been somewhat similar to other companies distributing natural gas We have done some work in education of the public along lines of proper utilization [illegible] years we have looked pretty carefully as a company after the consumer's installation work I think that relations are very good there as a whole We held of new active work last year for the very reason that we were about to meet a rate making situation and as we all know,

what you have to do so well that the Boss won't have to do it over again—The Lamp

r three contracts where we sell gas to other g companies. Referring to recommendation s transmission. Our company has installed compressing stations. Referring to No. 13 ation of recording pressure in inches instead rs. We have not changed ours. We consider stem of operation.

to the question of gasoline removal. We gas drying stations and on an average recover [illegible] gallons a day. Relative to inadequate s. We have worked on this in connection economics. We have charged service lines at xpense for the purpose of illustrating that the were entirely due to house pipes and at our ne have charged the pipes and showed house at the trouble was due entirely to their own.

The question of electrolysis is one that bothe nsparies more or less and we do all we can to [illegible]

[illegible] balanced distribution systems. Some [illegible] thirty or thirty-five years and [illegible] that period were small, and were high then. We have from time to time [illegible] changes as were necessary in installing larger lines.

[illegible] We have taken greater [illegible] all drilling wells. We have [illegible] in the event gas is found [illegible] immediately shut in or [illegible] immediately in the line.

[illegible] men in charge of gas [illegible] all districts. We have holding [illegible] average of about once in every two [illegible] talks and discussions [illegible]

[illegible] shut-off wells [illegible] a great deal in that respect [illegible]

[illegible] marketing gas from the [illegible] We like the gas if it is at all in paying [illegible] deeper sands. Relative to [illegible] We have [illegible]

[illegible] We [illegible] We [illegible] We [illegible] We have [illegible] We have [illegible] Where a spur [illegible] we have given them advice suggestions and recommendations. In fact, each consumer on our line has received our recommendations.

It is pretty hard to please some twenty-two thousand customers. We might find all appliances in good shape this month and next month in bad shape. We are doing considerable advertising and are recommending and suggesting that they watch their gas.

Mr. Christy P. Payne

Mr. Christy P. Payne was heard with close attention as follows:

For years our inspectors have gone over distribution plants and examined the service lines, meters and regulators. The slightest leak is important because of its danger to life and property. Such inspection service has been organized [illegible] over a field or transmission system, with a good deal of care. These men are trained to look for leaks with every device that might be used to detect a small leak. Of course their reports are voluminous. They walk, not only to the well but they follow the gathering lines, they follow the service lines of the field, to free consumers and the field gas consumers.

Here is a place where a great deal [illegible] waste can be [illegible] the amount of gas that is used by free consumers.

These inspectors have gone through measuring stations, through compressing stations, examined the use of gas in boilers [illegible] as well as the main lines [illegible] Many of their recommendations have saved leaks that possibly are too small to observe. We remember the instance would not see these leaks, neither would an assistant foreman or a line walker. He [illegible] discovered so small a leak. The report [illegible]

The men [illegible] but their recommendations [illegible] the methods of using gas. [illegible] much in the reports as [illegible] of auditors, after receiving our reports [illegible] them up by arranging them [illegible] They tabulate them and turn [illegible] in a way in which the management [illegible]

The report [illegible] companies reporting [illegible] same [illegible] of a report has [illegible] allied companies [illegible] have not paid the same [illegible] gas because they [illegible]

[illegible] there are [illegible] distances for their [illegible] as for the amount that can be [illegible] gas [illegible] when it is explained [illegible] great [illegible] serve the origin.

[illegible]

Nearly all of our gas is used at wholesale, and it is true that we have a very elaborate system of inspection,

but every man we have working for us in the field is considered an inspector. If he sees a leak he is supposed to report it. We have eliminated a great deal of our leakage, though I don't think we will ever eliminate all of it. It is a question of follow-up all the time. You have to keep after leaks continuously. We have meters on every free consumer. In the past we have had probably twenty-five hundred free consumers. They used as much as fifteen thousand pay consumers—they wasted that much.

We have now put meters on every one of those free consumers. We have no free consumers now except those specified by a lease. Nearly all of them would rather get gas from a line than from a well. When they get gas from a line they are under contract to limit the amount of gas they use. In addition to that, we have sent out a great many letters to show where they were wasting, these have had a great effect; we have probably cut down the amount of free gas one-half.

We have offered four or five prizes to the consumer who saves the greatest amount of gas and, so far that has shown a great effect. Eventually, we are going to get all consumers on the same basis as are pay consumers.

We have installed the most efficient appliances, have used low pressure gas under all of our own boilers and have tried to get other people to do the same.

Mr. J. J. McMahon.

Mr. J. J. McMahon of the East Ohio Gas Company, told of methods in vogue with those interests, as follows:

During the past few years we have done considerable advertising along conservation lines, and we have followed that up by having a department of conservation. We have women who are demonstrators in our office. I presume we have had 150 or 175 people who have called and seen these demonstrations. I think these demonstrations do more good, perhaps, than inspections.

We have found that where we made inspections that the consumer either does not understand or does not care, and doesn't pay much attention to what has been told him. When they come into the office, more time can, naturally, be given them. They see the reasons, are told the right way to use gas and are well impressed.

We have carried on a campaign among the schools and find there that we have done a great deal of good. The children become interested and tell their parents. This is especially true among foreigners, because the foreign father or mother not understanding English, does not pay much attention to an inspector, but when a boy or girl gives them the message they pay attention to it.

As far as the transmission lines are concerned, for a number of years we have been paying a great deal of attention to them. We have re-rubbered several sections of trunk lines. As to free consumers, we have very few, and today we limit the farmer to so many feet per month. If he uses an excess of that he has to pay the current rate. Instead of flambeau lights, just now we are using electric lights.

Mr. Bain: I understand there has been some difference of opinion with regard to the use of the old-fashioned gas stove and the artifiicial gas stove.

Mr. Corrin: We have used mostly the artificial; that is, open top and raised burner and in our demonstrations have showed what the raised burner can do. I think the raised burner should be used entirely.

Mr. F. L. Chase.

In his remarks, Mr. F. L. Chase of the Lone Star Gas Company, said: The gas problem in the mid-continent and western field, as has been said, is, I think, entirely different from the problem in the East. I think I am safe in saying that there is going into the air today in the states of Texas and Oklahoma an amount of gas that would supply nearly all the requirements of the entire states of Ohio, Pennsylvania and West Virginia. That is, however, something over which the gas companies have no control.

Our problem there is closely allied with the oil problem. There is hardly a field where gas is found that oil is not also found. The problem, therefore, becomes one that is extremely intricate and difficult to solve. The Lone Star Company, as soon as it gets possession of gas, takes every possible means to conserve it.

Perhaps on main transportation lines the same detailed care is not being taken to prevent waste that is taken in distributing plants, though with respect to the Lone Star Company, that statement does not hold good. In the first place, one of our rules is that no foot of gas shall enter our lines except it is measured. We have our main line divided into sections. I think we have something like forty or fifty sections. Every section is measured and our main lines have orifice meters along them.

When we instituted that system we began to work on the sections that showed the largest loss and made general improvements in those. After the improvements progressed, we began going over the same thing until, in the year 1920, our entire loss on all of our main lines was less than 5 per cent.

In 1921 it was a little more than 5 per cent. for the reason that we carried a great deal larger pressure. We patrol our lines and have gotten to the point now where we can take individual sections and improve them.

We go over a section, maybe thirty or forty miles long, and we burn that section at every joint and make note of every leak that was found and then start repair men over it so as to repair every leak.

We have a system of line walkers—patrolmen; they report daily. We have a telephone line over the entire system and these men are supposed to report every leak daily.

We have another problem there that is beyond our control, and which we are trying to remedy. We have still a number of percentage contracts where the pipe line company stands the loss by all the distributing plants

nom of no scheme that could be devised that
ncourage loss of gas more than such a form of
However, the distributing companies are now
mething towards remedying the leaks

hase stated that gas is being found throughout
part of southern Oklahoma and Texas, where
get fifty to one hundred foot wells, and that
rquently found, too, and that a great part of
any's gas must of necessity, come from the oil
s

peaker also said it would be absolutely impossible
h a market for all the gas produced, and that
market could be found for only a small per
of the gas from a well, but that this condition
been found since the great oil development
.

public," said Mr Chase, "seemed to believe it
r company's duty to furnish a market for the
that when the public gets the pipe line they think
nse of the great quantity of gas, the rates
e lowered

companies would go broke," said the speaker.
tried to follow the gas development with pipe
here were billions of feet of gas going into the
because there is no market for it" Said he
nst market the entire product from the wells
public, on the other hand, on account of the
of gas, think our charges are unreasonable They
realize the conditions they can not, they know
about the business

simply outlining some of the problems the gas
has no control over

Mr A K Cattell

A Cattell, natural gas engineer of the Bureau
, who has had detailed to him the work of in
g transmission gas losses, means of testing for
and to determine final remedy, said

nst know that it is important to determine just
kage is, the important thing is to determine how
e reduced and what proportion of the leakage
s exist it is economically feasible and practic
reduce This statement met general approval
ne present Mr Cattell also said, "Too much
land on percentage leakage which is not an in
the efforts the companies are putting forth to
he leakage"

Mr Alfred Hurlburt

lfred Hurlburt, who is general manager of the
ahta Company, had the following to say

question of the saving of gas, as Mr Cattell
n economic one purely and the Bureau of Mines
r a great deal to help the industry in bringing
rt to the fore I think that the first outcome has
good deal of education amongst our men and
loyees It has made us all go down the line
ress the value of this gas upon our employees

matter, however, is always one of determining
ch money can be saved by the money expended
If we do not so figure, we find we get in the red and are unable to get the money to go on with the work

"There is no doubt that the increase in the price of gas that has occurred, I think in practically all fields, has had a very beneficial effect on the amount of gas that has been saved Manufacturers have been very much more careful in the use of gas within the past few years than they formerly were They have got to make gas compete with other fuels They have seen their way in many industries

"We have ourselves established a department to call upon manufacturers using gas, and instruct and lend all possible aid in the use of appliances These appliances are as nearly perfect as we can get them We have also done a great deal of advertising to our consumers, informing them of the proper method of using gas in the household

"We have, in Pittsburgh, some five different offices in which we maintain demonstrations, we are trying to get people to come to these offices, for when they do visit them, their interest is at once aroused and they will return with a purpose to follow instructions

"When we advertise and send out men, house to house, before the people have become interested, frequently they pay little or no attention to the work we do at the home If, however, we can get them to come to our show rooms and see for themselves, they at once become interested

"In the household it is the question of the pocketbook and if what we there tell them does not in some way touch the woman's pocketbook she is not going to give very much attention to it

"We have gotten our men much more impressed with the value of the gas, and, as the price in the various fields has gone up it has made a very decided difference in their attitude

"I think, as Director Ham said, we have got to keep on educating, keep on talking to our men, and that the education in the fanuls has been most beneficial

"One representative stated that his company used to give a great deal of free gas in payment for right of way, but that in the past few years, by order of the state commission, they have no right to give gas away as payment for service, but must give definite payment for such service It has been surprising the quantity of gas that has been saved by that law The difference between the quantity of gas now used at the regular rates under such conditions and what was burned under free gas is very surprising

Mr J W Dana

Next followed Mr J W Dana of the Kansas City Gas Company who said

"As several have intimated, this question of conservation is all a question of economics The war prices for food stuffs emptied all the garbage cans in the United States so much so that the town feeder pig farms all went out of business After the same manner, the low price of gas has been the cause of its frightful waste in America The failure of the producer of the gas is

the field, the failure of the transporter of it, the failure of the distributor of it, and the failure of the rate-making bodies and the public to realize its worth is what caused the terrific waste.

"When the gas was bought in Oklahoma at from one to one and one-half cents a thousand and carried to Kansas City some three hundred miles and sold to the ultimate consumer, there was no conservation of gas. The result was shortages and bad service. For many years the same thing has been experienced, more or less, in other fields.

"When we finally got the rates up to about half what the gas was worth there was considerable effort to conserve the product. The producer in the field was paid enough so he could afford to conserve gas, and the Kansas City Gas Co. and other companies can now afford to spend some money, also, to conserve the gas.

"What we have actually been doing is practically everything that has been suggested here. We have been carrying on demonstrations in our offices to show the consumers how to conserve gas and we have been working through the schools. We have sent out literature showing how to conserve gas and have sent speakers to various town meetings.

"We think we have effected a very large measure of conservation in the homes, and have aroused much interest by showing how conservation touches the pocketbook. Consumers are generally willing to do the proper thing when this is brought to their attention.

"The company, itself, has instituted and maintained a very efficient inspection system such as has been suggested here, but in addition to that, under suggestion or requirements of the Kansas Commission, we have gone into a very extensive and effective leak survey. I mean by that not merely an inspection, but a blocking off of the town into sections and putting the line under pressure, cutting off all service, turning off all the house appliances, and testing the system to see how much leakage there is in the main.

"We found that one can very easily spend more money for such testing work than the saving is worth. I cannot recall the figures, but I know we expended, in many cases, far beyond any possible return or saving on the expenditure. We did it to demonstrate, to actually determine for ourselves what can be done.

"While we intend to go ahead and make a complete physical survey, block by block at a time, in both cities, at an enormous expenditure of money, we do not intend to follow that up to the extent of digging up every main that shows any leakage in it. We intend to dig up only where we can locate large leakages in certain quantities. We are not working on the percentage basis, which means nothing.

"As far as we are concerned, we would be very glad if the Bureau would make a sufficient investigation to determine what is a fair and proper loss per mile of three-inch main and give us advice on that. I want to guard that request with the statement that no uniform standard, I think, can be adopted for all situations, because of the varied construction of the different systems, and it would not be well, therefore, to undertake to estimate a uniform loss per mile of three-inch main for the whole industry. In other words, each case must stand on its own bottom and each distributor must determine from his own experience what he can afford to expend in the face of what he is selling his gas for, and what he is paying for it.

"I will close by saying that the greatest conservation measure any of us can adopt is for our own people to realize what the gas is worth and sell it for what it is worth."

Mr. Walter W. Freeman.

Mr. Walter W. Freeman of the Union Gas & Electric Company, Cincinnati, said: "I am newer in the business than most of you, although I have been a public utilities operator for about thirty years. My approach to the problem was distinctly the angle of the public at the outset. The first thing that struck me as serious in the natural gas problem was the constant shortages whenever the weather was cold. The complaint coming from the gas consumer that it was no benefit to him to be able to get an ample supply of natural gas when he needed it the least and to be unable to get it when it meant the most to him.

"Having been connected with lines of work where service was always furnished as a matter of fact and where any lack of service was inexcusable, I was frankly shocked at this element in the natural gas business. It took a very short time, however, to find out that it was inevitable and absolutely unavoidable, based on conditions as they existed. So far as I was concerned, personally, I was pretty much in the frame of mind that unless the problem could be solved I wanted to be in some other line of business, because to be indirectly responsible for the discomfort of thousands of people seemed intolerable.

"I think we have solved the shortage problem in Cincinnati within our need as applied to present conditions, and I am just optimistic enough, based on our own experiences, to hope that the problem can be solved throughout the territory through a *proper rate schedule*. It seems to me that is fundamental in our approach to the public in all of these problems. If you start out fundamentally with the proposition of giving service at all times the public will be much more receptive to suggestions that properly follow such a proposition made in good faith.

"Following the shortage problem, there comes up the question, of course, of assuring a supply as long as is possible. It is clearly to the interest of the public and it is clearly to our interest if we are able to continue in the business of supplying natural gas as long as we may be, and what I am interested in, simply because that comes a little closer to me than the practical side of the question just now, is how we can best get to our consumers practicable, workable suggestions for their cooperation with us in continuing the supply of natural gas as long as may be possible.

Rather be criticized for falling down on your job than for laying down on it

se, we must first clean our own house as far before asking the customer to take up his burden. The work being done by the pro- ganies shows they are aware of this problem dering their full measure of service.

een said more than once in this meeting that to discuss the saving of gas except on an ass. That is true. The burden rests upon us ke it as easy as may be practicable for the to utilize gas on a reasonably economical ba ave been approaching that problem in Can- Mr. Hoover has said, through the publi other avenues of instruction. Just how to ormation before the consumers through pub and other means is, however, a serious ques hich I think we ought to solve as soon as we

immediately confronted with the suspicion o the consumer that information given to th ected has back of it. To the extent which ment through the Bureau of Mines can en pproach the consumer on a basis of confidence statements made, I think they will be render scientific service to the people, and I am very at we can secure, through the Bureau of eration, in that respect having the stamp l of the Government on the statements o made.

l, it is a problem for the interest of the pub Government represents them, as we do, a ants. We are all interested in accomplishing result. It would be very foolish, even if w to go to the consumer with any statements t based on facts and that are not in his ultim st.

ussing this matter with Mr. Hoover, I have much pleased to learn that it is the desire of ittee of the Association to establish so far as a basis of very direct co-operation with the Mines having in mind education of the con e matter of conservation of gas, to make it that it is to his advantage to co-operate with vation and utilization on the basis of making last as long as it will and serve everybody possible purpose.

Mr. J. H. Mason

Mr. President: Chicago speaking as of Indiana,

na where I reside there is practically no gas interests to represent. Dawes Bros., Inc., Chi ge as mentioned, those here are primarily in gas business. We are primarily in the utility manufacturing gas and came into the natural s some twenty years ago by reason of de of natural gas in proximity to property where making gas so that our attitude towards the s been somewhat different than has been that engaged solely in the natural gas business.

e manufacture gas and account for the very small quantities that we have to account for as compared with the vast quantities that the natural gas man han dles, we are more able to account for it and having to buy raw materials, such as coal and oil to make it from, we have, of necessity, attached a different value to it.

"Today we are operating to serve, approximately 150,000 users with manufactured gas and about the same number with natural gas, but we are not engaged in the production of natural gas, we claim it considerably from producers. But we are turning our thoughts towards the future and perhaps, as much of a contribution as I can make to this gathering would be in connection with the utilization of natural gas in a way that has been but very slightly touched upon at this time.

"Our English speaking gas brothers across the water today are marketing almost all of their gas by what is known to them as the therm or that quantity which contains heat to the extent of 100,000 B.t.u.

"In this country the eight or nine million users of manufactured gas for domestic purposes use from 150 to 200 therms, for which they pay from $30 to $40, and the two and one half million users of natural gas for domestic purposes use from 800 to 1,200 therms, for which they pay from $30 to $40, so that if you turn your thoughts to the matter of the purchase price of gas per therm, which we ultimately will, it appears that the natural gas man today is selling a therm or unit of heat for about one sixth of the price that the manufactured gas man is getting for the same thing.

"Briefly, to get to the point that I just mentioned, the utilization of natural gas in a way that I believe will be of the utmost value in conservation, I will say that I just recently assisted in completing a small operation, where locally produced natural gas was utterly inadequate to serve the people, where today it is being fully utilized and the people of that community are being given first class manufactured gas service by using that natural gas in exactly the same way that we use gas oil. I have for this week engagements with owners of other properties who will do the same thing where there exists today no possibility of giving consumers the good natural gas service, but where there is enough natural gas to satisfactorily supply for many years a raw material that can be used in manufacturing gas, but the product will be sold as, and at manufactured-gas prices.

"In the operation that I have immediately in my charge we are carrying forward some experiments although they have passed far beyond the experimental existence, where we are now distributing natural gas transported over 800 miles but we are also using that same natural gas as a raw material which is used in manufacturing and distributing two gases that are sold as manufactured gas. These conform with the standards of the state as to all qualities as to cleanliness as to heat value, etc. In fact the requirements of the state are 570 B.t.u. whereas we make a 600 B.t.u. gas that in one case is produced by the manufacture of blue water gas from coke which is converted from 300 B.t.u. value to 600 by natural gas. In the other case we are producing

20,000 feet of 300 B.t.u. gas from a ton of bituminous coal, carbonized in coke ovens, which is enriched to 600 B.t.u. with natural gas.

"This kind of preparation will be of value as and when in different sections of the country natural gas gets down to that low quantity which will make it no more a practical thing to distribute and sell it as natural gas. It can then be used in the manufactured gas business just the same as any other raw material is used in the production of a high-grade manufactured gas."

Mr. L. B. Denning

Mr. L. B. Denning, president of the Natural Gas Association of American, and an important factor in large natural gas company affairs, said:

"There is one point I have not heard touched upon. The business depression of the last two years and the readjustment period, which I hope we have largely gone through, and I feel that we are now on the up grade. has demonstrated to my mind very conclusively one thing in relation to the gas business, and that is that the ordinary gas company, I can safely include all of them in that category, cannot keep doing business and cannot finance and render the service which the public demands upon purely domestic business. (Applause.)

"We can not lose sight of the relation the industrial branch bears to the total at the present time, nor can we lose that business or surrender it at any time in my judgment. I know of at least two companies whose revenues are considerably less than in previous years, and that loss is brought about by reason of loss of industrial business, and is not offset by increase in price to the domestic business. We must demand a gradual growth.

My suggestion, which may not meet the approval of the assembled gentlemen, but which I submit, is that the sooner we can get the domestic business on the basis of manufactured gas with the right or privilege of getting out and using our energies to convince the manufacturers that they can pay considerably higher prices for natural gas for industrial purposes, the sooner the natural gas business and the public will both be benefitted. I have called the bluff of a certan gentleman standing high in the manufactured gas world, who has agreed to have present at the meeting at Kansas City in May a man who will tell the assembly of natural gas men what has been done in the way of developing industrial business. He said he is getting an average of 62 cents a thousand from industrial business. If he can do that from one-half the B.t.u.'s of natural gas, it seems to me the natural gas men have something to learn. Mr. Maxon con tell me whether or not it is a bluff."

Mr. Maxon: I can say the gentleman will have to sell his gas at the price that will meet the cost of gas made from bituminous coal and of fuel oil and he will have to deliver a certain number of therms for a certain number of dollars, or he cannot do the business. The oil man and the coal man will fix the price of his gas.

President Denning: We cannot go ahead on the present prices paid for domestic gas, and I doubt if we could do that if we were being paid the customary price of manufactured gas, without industrial business.

"We have proceeded along certain definite lines. Our policy has been to co-operate with the public to the greatest extent possible. I will put it this way. We undertook to carry out the idea of making inspection upon some of the properties. The reaction was not good. They thought it was doing something the gas companies were seeking to compel them to do. We abandoned it. We have taken another plan, that of publicity, pointing out to the domestic consumer how and in what way they can aid themselves, standing ready to co-operate with them and give them assistance, trying to arouse in their minds a desire to be helped, figuring that if the housekeeper is interested and will ask for it we will get better co-operation. The result is we are not spending as much as inspection would demand and I believe we are getting results.

Mr. Christy P. Payne.

Mr. Christy P. Payne, whose interests lie in very important natural gas circles said:

"During the past two years the companies with which I have been associated have had three investigations, made by engineers; one was for a local rate situation, involving appraisal and study of rates. The second was made by a national engineering firm with a staff of over a hundred men, studying the problem of appraisal, the amount of gas available for market, and what price would have to be realized to obtain operating expenses, interest on investment, etc. The third engineers have studied the problem from the point of view of depreciation and Federal income tax purposes. The conclusion has come to us that from merely domestic business, no matter how high the price, you will never be able to realize returns on your investment, unless you sell for industrial purposes. They have made a study to show, when price increases, how much delivery to domestic consumers will decline, and they determined that your gross sales will be so cut for domestic delivery that you will not have income sufficient to pay return, and you must sell for industrial purposes to have the proper economic result.

"I am not saying what price the domestic consumer will cut, it may be 60 cents or 70 cents, 80 cents or a dollar, but somewhere in there it cuts the delivery, so that you must have the industrial business to maintain your plant. The public welfare and the company welfare are synonymous terms."

Director Bain: As a plant, do you make contracts to supply industrial consumers for only a part of a year?

Mr. Payne: Every contract contains that provision. Every industrial consumer must relinquish his supply when needed by domestic consumers.

Director Bain: What does he do during the winter?

Mr. Payne: During the past two winters there has been very little industrial demand. Prior to that time

s were not for prolonged periods ten days rks, and during that time the industrial man down unless he had laid in an auxiliary sup other fuel, which a good many are equipped

Bain I was wondering whether you could d, in a broad way, for industrial plants to ary plants

burt I great many do that in Pittsburgh

Bain What type would that be?

burt Fuel oil, the change is made with less re Whenever they can get natural gas they r use that at the rates heretofore prevailing

Bain I would think that your price would competition with coal, as also would be the uel oil, which sells for less than its value The very large number of people who are oal gives a force to the selling price that n over into the oil field

r We cannot take advantage of that situa ish We have made an investigation which, ning has stated, shows that at any price the Company could secure, it could not exist business alone

ustrial gas business becomes a matter of pure and simple The industrial gas user lad, if he could save money, to buy oil or ever, we run up against a situation that is ith the domestic consumer that there s inherently wrong when a gas company will the price for domestic business and will ch or so sell to an industrial plant at a very ed price The consumer honestly does not that situation, the gas man does It is hard nd we get no assistance from public authori uld in some way and in promulgating among e the idea that the practice is a proper one

thing I do not know how it is in some sec ith us rates for either domestic or industrial s through some sort of formulating process are established There is no flexibility and nature of things we are prohibited from tak ge of the matter of flexibility in rates It ach better for all concerned if there was less tion regarding the rates on industrial gas s could follow competitive rates and charge s much as they can it would be to the benefit estic consumer

uel oil is our great competitor It jumps up We have to go through a long procedure of s thirty days notice and other delays and s we get through, our fuel oil will jump away do not want the rate

be better if you could charge all the traffic because the consumer is wholly selfish in He only burns gas when he can see a profit e are prevented from taking advantage of n, which I think *should* be taken advantage of That gets us back to the idea that the public is entirely misinformed for it will not accept as truth the statement of the gas companies that the practice of charging lower rates for industrial gas is a proper one

Here the chairman, in explanation, addressed the Director who following, took the floor

Mr Director we find it an impossibility to get together to talk conservation unless the value of the fuel is talked of and I hope you will realize that this is not a rate-making body but that the subject of price must come up

Mr H Foster Bain

Director Bain Any conservation must be based on good economics, and rates enter into the thing, and I believe the Bureau of Mines will be more helpful to the industry if we do not as a Bureau get into the rate business (General approval of this statement was vouched for I, as an individual, when buying anthracite coal pay more for it than those who buy it in large lots The public is educated to that That is a general matter of public policy and economics In the question of whether you should have fixed rates or flexible rates you get into the analogy of railroad control, and the public needs more education than we could give it, and I think the Bureau could be more helpful to stick to the technical phases of the matter and to matters of fact

As I get it from the discussion this morning, it comes down to two sorts of things First, with regard to the amount of further education that is needed in the organizations of the companies themselves and their plants

And that runs into the question as to whether or not we have the facts all available that we want and perhaps leads to the discussion of the question of whether we should not do more work along the line that Mr Cattell is just starting out to do

The other question is the amount of information that would be helpful to the public

The matter of finding out what [illegible] possibility of making the best of your experience from one part of the industry available for all is the most of thing that Mr Cattell is just starting on and I think that with your cooperation much can be accomplished

There are differences in experience as to just what losses there are in leakage That will be a rather long campaign and we are just beginning on it We are going at it open minded we have not a word to [illegible] to whether your losses are 1½ per cent or 2 per cent The loss may be big or little [illegible] important [illegible] it may be easy to [illegible]

The other matter that [illegible] be given out to the public [illegible] the Bureau of Mines [illegible] we should continue along the present lines We want the Association to bring its information [illegible] and as to the method of putting that over to the public [illegible] there are pamphlets in terms which are [illegible] which we think are good, as we have found to be the case in our mine rescue and first aid work that the more we talk

Cooking With Waste Gas

Household Tank Heaters Source of Waste. How it Can be Avoided

THOSE of us who a few years ago at night traveled through Pennsylvania on various of the steam railway lines well remember the big standpipes that rose at various corners in little towns and larger communities along the railways, from the apex of which standpipes blazed day and night, day in and day out, and night in and night out, great flambeaux illuminating the country round for miles. It was the burning of natural gas let loose, millions upon millions, and billions upon billions of cubic feet wasted every day and every night.

From this riotous condition, regardless of the future and of the comfort and pleasure of those later to come on, a great industry grew up and took to itself the name "natural gas industry."

Year after year, the waste has continued, diminishing however, in volume by virture of diminishing supply, and an awakening to the fact that whereas there was plenty and to spare, that plenty has gradually been disappearing without replenishing.

Today the Bureau of Mines of the Department of the Interior, the gas companies, we publishers, and others, are putting forth exceeding effort to encourage and to accomplish the conserving of natural gas. And now from the pen of E. D. Ivory comes an article descriptive of ways by which much gas may be saved through the proper burning of the element for the producing of heat. The writer says, as it will be seen, that in many instances, if gas users would use gas properly in water heaters, they would produce the results they are after, and have sufficient gas left to do all their cooking.

We will reprint the writing of Mr. Ivory, using the illustrations that we gratefully acknowledge from his hand, knowing that although the prime object in preparing this matter was to induce saving in the natural gas field. Our readers in the manufactured gas industry will be much interested, and we are sure many will be profited.

Mr. Ivory, the writer, is Commercial Manager of the Peoples Natural Gas Company of Pittsburgh, one of the examples of progressive and aggressive types of companies that are aiding in the converting of the field of natural gas from the attitude of a piece of pipe drilled to form a burner, to the use by the public of the highest types of gas appliances that today are being produced countrywide. The Peoples Company is out to give the public service. It is one of the natural gas companies handling gas appliances, and mindfully of future is specializing along the lines of service to public.

Mr. Ivory's writing is as follows:

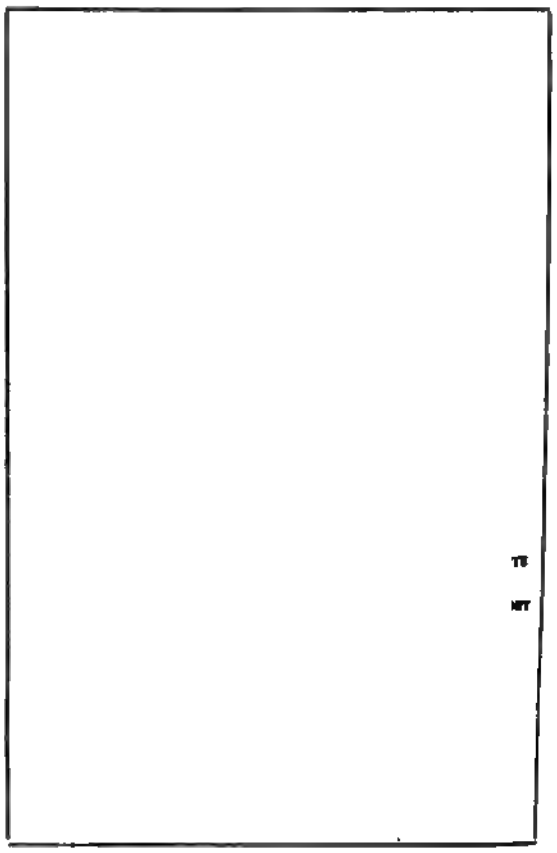

FIG. 1.

AFTER making thorough tests of household tank water heaters and of best methods to conserve heat in the water, it has been found by observation and comparison that thousands of consumers use nearly *five times* more gas to heat water for household use than is actually necessary.

If these thousands of consumers would correct the wasteful conditions existing, they would not only have plenty of gas to heat water, but they would have enough left to do all their cooking. This would amount to more than 1,000 meals per year, would greatly reduce gas bills, and help to avoid a shortage of gas.

We have here endeavored to point out a number of

The thing that matters is what you think of yourself, and that you believe in yourself—Beffel

ults that should be corrected and to show features it should be added to make such equipment more secure and economical

Provide cold water tube to and circulation and prevent cold water from flowing directly over to hot water outlet as illustrated in fig 2

Low side connection for hot water from heater to tank causes poor circulation, slow heating of water Nearly entire tank of water must be heated to obtain a few gallons, burning gas continuously to have two or three gallons available when needed This is a great waste of gas

The remedy is a top or high side connection, as shown in figs 2 3 and 4 either of which will make three or four gallons of hot water available within a few minutes after lighting the gas

The gas should be turned out immediately after the required amount of water is drawn

An asbestos tank covering as shown in fig 4 is of utmost importance to conserve heat in the water by stopping excess radiation of heat from the tank This

FIG. 2

Fig 1 is a good example of a very poor and inconvenient heater Note these faults Short, undersized water ineffective coils, poor burner and mixer non frostable gas orifice, burner and mixer clogged with [illegible] and dust, entirely too much gas for capacity of mixer insufficient air through mixer and unusual flame

The result is incomplete combustion, long sluggish yellow flame plenty of soot, carbon all of which continue to accumulate until it is almost impossible to heat to penetrate the carbon-insulated coils into the water Part of the gas passes out unburnt causing unpleasant irritating odors and worst of all poisonous fumes which cannot be detected by an odor This would also apply to any other gas appliance The public should be taught that such a condition is dangerous and call the plumber or the gas company at once

To Make Your Equipment More Efficient Provide [illegible] pipe [illegible] fig 3 to carry out ordinary products of combustion or escaping gas in case flame should be accidentally extinguished

Provide automatic draft regulator to check excessive updraft wasting heat, or any down draft which might hinder or extinguish the flame [illegible] fig 3

[illegible]

[illegible] should [illegible] gas [illegible] per cent [illegible] per cent

Provide [illegible] to prevent siphonage [illegible] water into hot water outlet and to avoid [illegible] gas [illegible] the consequent cooling effect fig 3

Tomorrow: The day when idle men work and fools reform — Nuggets

g 1-inch space all around tank into which the ordinarily wasted from the flame, will pass and upward over a tank heating surface 18 times than the mere bottom of the tank. Now cover jacket with asbestos insulation of ample thick which if properly applied will save three-fourth radiation losses. See that the burner, mixer and tube are of proper size and clean producing a sharp blue flame and you will be agreeably surl at the efficient and economical equipment you made from a crude wasteful one. Such installa are not infrequent in the natural gas field.

KANSAS AND GULF ADDS WELLS

FOLLOWING an inspection of the Kansas A Gulf Company's properties in Kansas President H. L. Mourer announces authorization for the immediate drilling of six new wells. of them will be located on the 58 acres Brown in South Butler country which is in the center of recent production in the Fox Bush field extes

sixth well will be drilled in conjunction with council Oil Company on the Greels farm in the nce field.

provide for drilling operations on a large scale Kansas A Gulf Company has erected several new houses and pump houses on the Brown lease. A ete dam 100 feet long and 7 feet high has been ated to furnish an adequate supply of water.

AN UNSOLD FIELD

THE American Gas Association is seeking to assist the gas companies of this country to make their heat fields "sold" fields rather than "unsold" fields. It asks the question in so far as water ters are concerned: "How long will the field remain unsold?" It then answers the question by saying "until the gas company gets 100 per cent of the owners heating water by gas."

e Commercial Section of the A. G. A. in its ef to stimulate sales of appliances and thereby ase suggests in the field of water heaters that gas ompanies should cooperate with plumbers. In its ancement along this line the Association says:

"Local plumbers can be a great aid in extending the use of gas for water heating or they can be largely influential in recommending coal stoves. In Indiana this influence may not count for much ever, it is quite a factor and will be felt one way or the other by the gas company. It is suggested that the plumbers should be individually interviewed and made acquainted with the company's plans and with cooperative arrangements entered into which will be reciprocally beneficial to both gas company and the dealer."

The A. G. A., in concluding its statements, says:

"There are but 1,500,000 gas water heaters of all types installed on the lines of gas companies, whereas nearly 7,000,000 gas cooking appliances are doing service, so that it requires but little stretch of the imagination to see the wonderful possibilities in gas sales from the intensive cultivation of this unlimited field.

"Have you as many automatic water heaters in your town as there are automobiles or pianos, or victrolas? If you have not, here is a worthy goal for your efforts."

It is to be hoped that the gas interests will enter whole-heartedly into the sales campaign covering water heaters, ranges, etc., etc., that will be advocated by the association. "Let's go, boys!"

CLASSIFYING THE PUBLIC

Wealth, Income and Occupational Classification of the American People—A Chart Cleverly Prepared by Samuel S. Wyer

(SEE CHART ON FOLLOWING PAGE)

THE diagram at the left, in public utility parlance, shows the present fair value of the American people's property to be 275 billion dollars. Buildings and land represent 80 billion dollars; agricultural property represents 75 billion dollars; and all the public utilities represent 41 billion dollars, of which 25 billion dollars is [illegible]

This shows that the American farmer with land and buildings worth 75 billion dollars has only 4 billion dollars of farm mortgages. The total gold and silver in our so-called "hard money" represents about 4 billion dollars. The alleged war debt is 11 billion and our total foreign investments but 4 billion.

Our annual income in 1920 was 69 billion dollars and in the pre-war years 11 billion in 1922 and the immediate future will be about 90 billion.

In 1920 [illegible] billion dollars of the American [illegible] and 1 billion to other public utilities; our insurance cost 5 billion and the total federal, state and local government expense was [illegible] our savings were 15 billion. Our total foreign expense was 11 billion.

An interesting [illegible] for the year 1920 is that the [illegible] of the American people [illegible] billion dollars, the [illegible] billion dollars to the [illegible] our business was [illegible] each other.

In the [illegible] are average earners 25 [illegible] are wage earners and 16 [illegible] fifteen and [illegible] the farmers and farm laborers taking 11 [illegible] interests the [illegible] are about [illegible] million and therefore [illegible] about [illegible] and the [illegible] of American [illegible] a glaring example of what a small [illegible] can do [illegible] a social organization.

A lot of us still keep our brains in captivity

WEALTH, ANNUAL INCOME AND OCCUPATIONAL CLASSIFICATION OF THE AMERICAN PEOPLE

PREPARED BY
SAMUEL S. WYER
CONSULTING ENGINEER
HARTMAN BUILDING, COLUMBUS, OHIO
MARCH 1922

BASED ON RECENT BOOK
"WEALTH AND INCOME OF THE AMERICAN PEOPLE"
BY
WALTER RENTON INGALLS

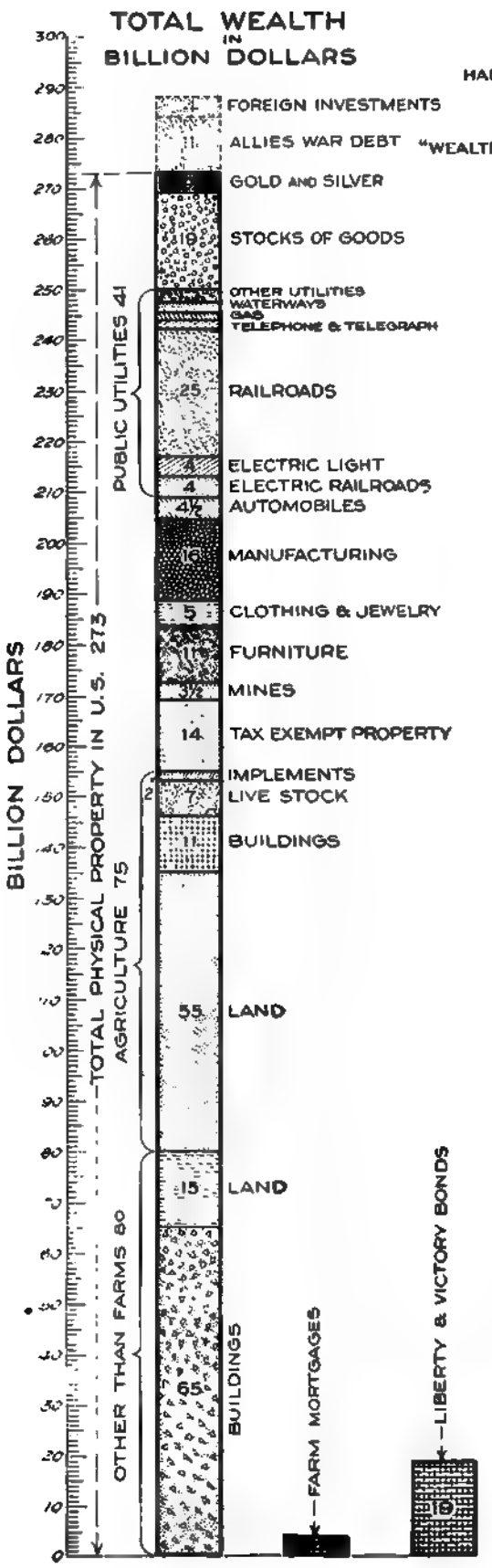

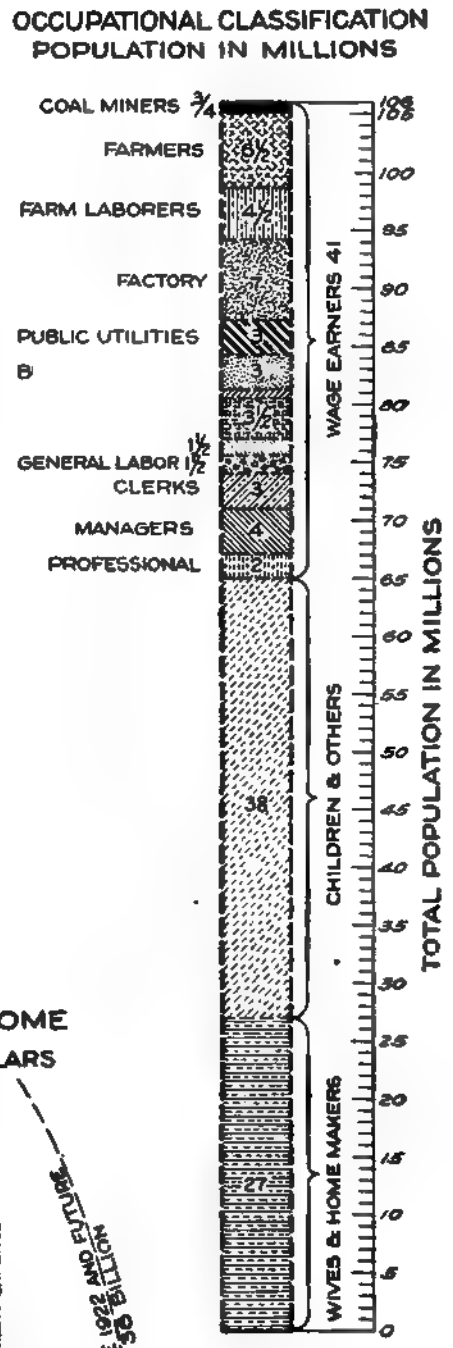

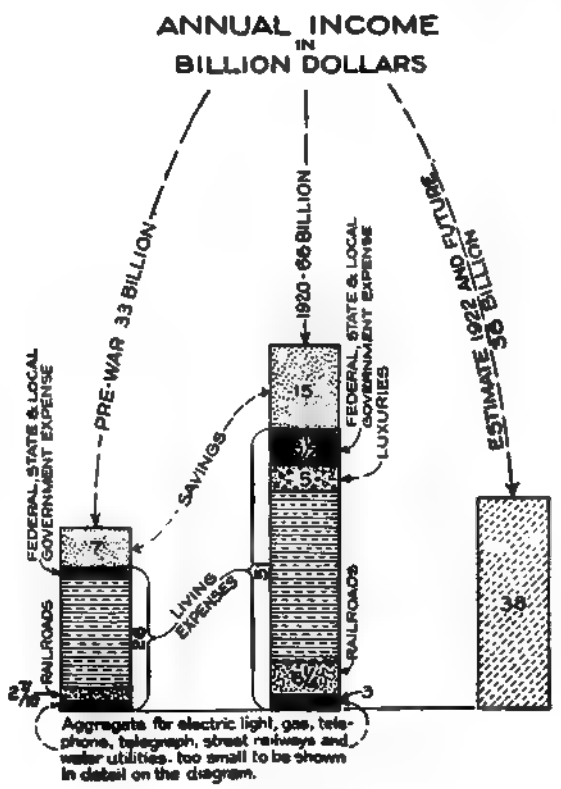

de Light on Consumer Situation

A Glimpse Behind the Scenes in the Natural Gas Industry Would be an Excellent Means of Educating the Public to the End That Better Understanding May be Established

By Kitty Barry Crawford

after Mrs. Crawford had secured an interview ... Ward, President of the Dayton Gas & ... at Mexia, Texas, ... [illegible] ... Texas ... [illegible] ... These having ... [illegible] ... the industry ... [illegible] ... Texas ... [illegible] ... of Mrs. ... Editor's note.

... section of the country enjoy... a fling to talk from another section. It ... method of displaying superiorities ... conserve your natural gas for ... the ... demands of ... We would if we could ... the ... Mississippi makes ... [illegible]

... Southwest ... great ... between gas producing ... markets ... scattered population ... of natural gas and ... individual gas ... regulatory powers of the ... circumstances that ... [illegible]

[illegible]

[illegible]

[illegible]

would be an interruption ... at the moment of greatest need ... [illegible] ... such a state of affairs.

The period ... gas ... very small ... [illegible] ... In the South... west it is ... [illegible] ... supply called for ... [illegible] ... the morning.

And yet limited ... mere period ... the twenty four that ... service ... gas service ... maximum. It must be ... estimated ... few cold hours ... the ... twenty four and almost ... extend throughout the year.

The basis of the service ... be employed ... against ... the capacity ... average ... ready to serve ... [illegible] ... ranges.

[illegible]

[illegible]

Very few if any, persistent advertisers have failed to attain results

to make chill the environs of gas consumers. Citizens are apt to wake shivering in the blast of sudden freezing weather, and immediately light every gas burner in the house at full capacity, and for five or six hours until the house is thoroughly warmed and the first two meals of the day prepared, these burners are kept wide open. Of course, with the more important kitchen activities of the day over, and the house once more comfortable as to temperature, a number of the household burners are turned off at noon. But, the demand for the day must be based on the morning need and not upon the average winter demand and the gas service must be such that it will instantly supply enough gas to meet this extra heavy drain, even if it is for only a few hours of the twenty-four. This emergency demand for gas, if continued at the rate for the coldest hours through the twenty-four of the day, would approach sixty million cubic feet of gas, that is, if the extreme cold weather and the heating and cooking necessities in the households stayed at the rate gas is consumed on the colder days, from six a. m. to twelve o'clock noon, around fifty-seven million cubic feet of gas would be called into service. Only about thirty million cubic feet of gas is usually used in a city of 30,000 domestic consumers on days of extreme cold, but early morning hours of such days gas must be supplied at the rate of almost sixty million cubic feet. To meet these emergencies, therefore, the gas company must be prepared to supply gas at the rate of sixty million cubic feet in order to do so when gas is vitally needed at times of unusual cold.

Both in towns and in the field, the gas company must be equipped and manned to take care of this maximum demand for gas, although it is only actually called upon to deliver this maximum amount for a very short time during the winter season. First, the gas company must have this maximum quantity of gas available for instant use; next, it must possess the mechanical equipment and man power for delivering gas at the highest ratio needed. Between the average demand and the ratio of cold hours (reckoned by periods of twenty-four hours) there is a difference of more than fifty million cubic feet of gas. If the gas allotted to such a city was conserved for exclusive domestic use, the gas company would be obliged to earn from a daily average sale of seven and one-half million cubic feet, a reasonable return upon its investment in lines, distributing equipment and source of supply capable of delivering gas for certain cold hours on the colder days, at the rate of almost sixty million cubic feet of gas. Not only that, but the price to the consumer would include, beside leakage (about thirty per cent between the field and consumer), depletion of plant, interest and increased operating expenses contingent upon the maximum gas demand. It is this extra expense, or the difference between the daily average and the maximum, that is taken by allowing the industries to make use of the gas. Needless to say, an enforced reservation of this gas for solely domestic use would at least treble its price to the consumer. The question now to be decided is this: "Would the consumer receive an adequate compensation for this increased price, both in length of time for natural gas service (limited always), and, in convenience?"

Gas experts who have spent long years in the service of consumers in the Southwest, believe that consumers would not have an advantage to themselves in a fair ratio to the price they would have to pay for gas. In Texas, the gas for average requirements of a city of 150,000 population, namely, seven and one-half million cubic feet daily, might be supplied from eight to ten wells of average rock pressure and volume of yield. But to meet peak load requirements, the gas company must have fifty to eighty gas wells available for emergency use. If the gas company has required to supply for sole domestic consumption, output of all of its wells save eight or ten would necessarily have to be shut in during the greater part of the year, and the gas company would have no other use for its product were it limited entirely to domestic consumption.

In Texas, as we have said, the transmission lines bringing gas from the field to town, are from thirty-five to two hundred miles in length, with an average of 100 miles. To supply a town of 30,000 inhabitants or consumers, with its average need of seven and one-half cubic feet of gas a day, an eight-inch line, costing about $11,000.00 per mile, would be required. To care for the maximum demand, however, the company would need a sixteen-inch line, which would cost $20,000.00 per mile, or, nearly two times the cost of the eight-inch line.

The distributing system in the town must be based on the maximum need of gas, and its expense of installation and maintenance will be proportionately great. Compressor stations must be designed to handle the maximum gas requirements. The upkeep on this plant and equipment is ten times as great as upon equipment for average consumption, and the labor four or five times as great. The inconvenience and unfairness to labor of part-time employment should also be considered in the matter of limiting the use of natural gas for domestic consumption.

It would appear on the surface, that the gas well not required in cold weather could be shut in and conserved, thus necessitating no added investment, when figured over a sufficient period of years, for the drilling of new or additional wells. Southwestern conditions, however, preclude this plan, as it is not practicable. From experience, gas producers in the Southwest have discovered that many wells cannot be shut down for any appreciable length of time without serious loss of rock pressure and volume. This loss is caused by underground depreciation and water encroachment. In a large percentage of cases, also, offset wells force the gas companies to take gas from such offset wells ready for production, or lose gas from its own wells by drainage through the offset wells.

In Texas the expectancy of production from a gas well can be safely estimated for only two years, and even with this estimation of production, if the well was shut in for any length of time during this period, the

Fortune has wings. It wouldn't get anywhere if it remained on the ground

GASOLINE CORPORATION MOVES OFFICES

Many a man who punches a time clock lives to wear a full jewelled chronometer

HOW WE GET BUSINESS IN KANSAS CITY, MISSOURI

By C. W. GREEN,
Vice-President and General Manager, Kansas City Gas Company

A brief statement of how they do it in the place we are going to in May.—Editor.

YOU hear a great many complaints about business conditions. Eight men out of ten you talk to say there is little or no business, people will not buy and the prospects for the future are very bad. This is a mistake. There are more people in the United States today than there ever were and they all have to buy goods, but they are getting "wise." They will not pay more for goods than they feel they are worth. Show them values and they will buy.

In order to prove that my contention is correct, I will give an example. On February 6th, our gas company put on a sale of gas ranges of a certain make. We did a lot of advertising in the newspapers. We also put out an advertisement that fitted on the door knobs of the residences of the city, stating that this sale would start on February 6th. On the first day we sold 103 ranges, while during the previous six months we had sold but 242 of the same kind of stoves. The reason we were able to sell 103 ranges the first day of this sale was because we made a price that on the face of it showed the public they were getting their money's worth, and were at the same time buying a high-class range.

Another feature of our work in Kansas City is showing the users of gas how those save money who buy *modern gas appliances.* We secured good talent who gave talks to the women's clubs throughout the city, explaining by charts, the difference in cost of operating an old style and a modern gas appliance.

Our company is trying in every way to let the public know that with it, *service comes first.* Dividends will follow good service.

We treat our employes as men and women should be treated and not as cogs in a big machine, and thus we gain their co-operation. The heads of the several departments seek to make the employees under them feel that they are their friends, and not that their only interest in them is to get as much work as possible out of each one. We find this is a big help in giving service to the public.

We have a club, organized by our employees, which is known as the "Good Fellowship Club." In this club all of the officers of the company are members, while all offices in the club are held by employees; none by officers of the company. A meeting is held each month to transact business, and four or five dances are given during the winter, with an annual picnic in the summer. The picnic is largely attended by the employees and their families.

These various gatherings bring the heads of departments closer to their men and create that spirit expressed in the club name, "GOOD FELLOWSHIP."

As a special feature the club runs a lunch room in the office building. This is self-supporting and saves those who patronize it from twenty to thirty cents a day.

We try to impress on all of our employees, that employment in our company is as good a place as they can find, if they are willing to work. "Turnover" in any business is one of the big items of expense. We have very little in our force.

In closing, let me say, we, like others, have found "The Big Party" is over, and if one wants to get business now, he must go after it. To realize that, is half the battle.

SUPPLY MEN! NOTICE!

The following letter from the Board of Directors of the Natural Gas Association of America addressed to the Association of Natural Gas Supply Men, has been received:

Pittsburg, Pa.

Mr. Fred A. Miller, President,
The Association of Natural Gas Supply Men,
Bradford, Pennsylvania.

Dear Sir:

Owing to the peculiar arrangement of the Convention Hall at Kansas City it will be necessary to hold the meetings of the Natural Gas Association of America in the Hall itself with a drop curtain separating the meeting room from the exhibits.

The Natural Gas Association deems it a duty they owe the Supply Men to hold their meetings in the same hall with the exhibits, but we are inconvenienced this year by not having a suitable meeting place in the same building, and the arrangement noted above is necessary.

Therefore, in view of the above stated fact, we must ask the Supply Men to kindly, either close their booths during the meetings of the Association, which will be held from 9:30 A. M. to 1:00 P. M., or remain quiet enough that the meetings will not be disturbed.

We hope you will give this earnest consideration, and insist that all of your members attend the meetings, on which so much effort has been spent by the officers of this Association, and give us your heartiest co-operation as you have always done in the past to make this convention a real success to the mutual benefit of both organizations.

Yours very truly,

THE NATURAL GAS ASSOCIATION
OF AMERICA.

Your co-operation in the above is earnestly solicited.

Too many men strike while the head is hot

Bailey Meter Co., Cleveland.
Bastian-Morley Co., La Porte, Ind.
Bessemer Gas Engine Co., Grove City, Pa.
Black, Sivalls & Bryson, Bartlesville, Okla.
Bovaird & Seyfang Mfg. Co., Bradford, Pa.
Bridgeport Machine Co., Augusta, Kansas.
The Bristol Company, Waterbury, Conn.
Bryant Heater & Mfg. Co., Cleveland.
Chaplin-Fulton Mfg. Co., Pittsburgh, Pa.
Geo. M. Clark & Co., Chicago.
Cleveland Gas Meter Co., Cleveland.
Continental Supply Co., St. Louis.
C. and G. Cooper Co., Mt. Vernon, Ohio.
Wm. M. Crane Co., New York
Louis J. Cuneo, Gas & El. Co., St. Louis, Mo.
The Becker Company, Newark, Ohio.
Henry L. Doherty Co., New York.
S. R. Dresser Mfg. Co., Bradford, Pa.
Equitable Meter Co., Pittsburgh.
Estate Stove Company, Hamilton, Ohio.
The Foxboro Company, Foxboro, Mass.
Frick & Lindsay Co., Pittsburgh.
General Gas Light Co., Kalamazoo, Mich.
Gilfillan Machine Co., Ebenezer, N. Y.
Hays Mfg. Co., Erie, Pa.
C. M. Heeter Sons & Co., Inc., Butler, Pa.
Hewitt Rubber Company, Pittsburgh.
Hope Engineering & Supply Co., Pittsburgh.
Humphrey Co., Kalamazoo, Mich.
Imperial Belting Co., Chicago.
Jarecki Manufacturing Co., Pittsburgh.
Jones & Laughlin Steel Co., Pittsburgh.
Kansas City Gas Co., Kansas City.
Koppers Company, Pittsburgh.
A. Leschen & Sons Rope Co., St. Louis.
Ludlow Valve Mfg. Co., Troy, N. Y.
Lunkenheimer Company, Cincinnati
Mark Mfg. Company, Chicago.
S. M. Jones Company, Toledo.
Metric Metal Works, Erie.
Lee C. Moore & Co., Inc, Pittsburgh.
H. Mueller Mfg. Co., Decatur, Ill.
National Tube Co., Pittsburgh.
New York Belting & Packing Co., New York.
The "1900" Washer Co., Binghamton, N. Y.
Oil & Gas Journal, Tulsa, Okla.
Oil Well Supply Company, Pittsburgh.
Parkersburg Rig & Reel Co., Parkersburg.
Pittsburgh Meter Co., East Pittsburgh.
Plymouth Cordage Co., North Plymouth, Mass.
Reliable Stove Co., Cleveland.
Republic Iron & Steel Co., Youngstown, Ohio.
Reznor Mfg. Company, Mercer, Pa.
George D. Roper Corp., Rockford, Ill.
W. P. Taylor Co., Buffalo.
Ruud Mfg. Co., Pittsburgh.
Sprague Meter Co., Bridgeport, Conn.
Superior Tube Co., Kansas City, Mo.
United States Rubber Co., Pittsburgh.
Welsbach Company, Gloucester City, N. J.
Wico Electric Company, Springfield, Mass.
Scott Gas Appliance Co., Baltimore.
Westinghouse Elec. & Mfg. Co., East Pittsburgh.
Worthington Pump & Mch. Co., Buffalo.

CONVENTION PROGRAM

Monday, May 15th

Convention Hall Will Open Monday, 9:30 A. M.

Luncheon will be served free to all members wearing badges, starting promptly at 12 o'clock. Compliments of the Association of Natural Gas Supply Men.

MONDAY, 2 P. M.

Annual Meeting of the Supply Men's Association in the Balcony over the Main Entrance.

MONDAY, 5 P. M.

Annual Meeting of the Board of Directors of the Natural Gas Association of America at the Muehlebach Hotel, Mezzanine floor. Dinner served.

MONDAY, 8:15 P. M.

Special Smoker with boxing bouts and other entertainments at the Kansas City Athletic Club. Tickets for this will be given you when you register.

TUESDAY, 9:30 A. M.

Meeting of the Natural Gas Association of America in the Meeting Room at the rear of the Convention Hall.

Meeting called to order by the President, Mr. L. B. Denning, Pittsburgh, Pa.

Address of Welcome, Hon. Frank H. Cromwell, Mayor of Kansas City, Mo.

Response in Behalf of the Association, Karl C. Griffith, Dallas, Tex.

Address of the President.

In Memoriam—Report of the Memorials Committee, W. H. McKenzie, Chairman.

Report of the Board of Directors.

Report of the Treasurer.

Report of the Finance Committee.

Report of the Committee on New Members, G. F. Batchelor, Chairman.

"The Indeterminate Franchise," J. W. Dana, Kansas City, Mo.

Report of the Wrinkle Committee, W. Re. Brown, Columbus, O., Chairman.

Report of the Committee on the Prevention of Waste, Jno. B. Corrin, Pittsburgh, Pa., Chairman.

Discussion — Production Problems, F. L. Chase, Dallas, Texas, Chairman.

"Telling the Public the Story," G. C. Maxwell, Cleveland, Ohio.

Luncheon will be served immediately after the meeting.

TUESDAY, 3..00 P. M.

American Association base ball game. Tickets for this will be given you when you register.

WEDNESDAY, 9:30 A. M.

Meeting again called to order by the President.

Report of the Committee on Uniform Accounting, Geo. W. Ratcliffe, Pittsburgh, Pa., Chairman.

"Standardization in the Natural Gas Industry," H. C. Cooper, Pittsburgh, Pa.

Discussion—Transmission of Natural Gas, Burt R. Bay, Bartlesville, Okla., Chairman.

Discussion—Distribution of Natural Gas, F. F. Schauer, Pittsburgh, Pa., Chairman.

Report of the Joint Committee on Electrolysis, F. M. Towl, New York City, Chairman.

The annual picture of the convention will be taken in front of the Convention Hall immediately after adjournment of this meeting. Lunch will not be served until after the picture is taken, so there is no need for hurry.

WEDNESDAY, 6:15 P. M.

Seventeenth Annual Dinner to be held in the Pompeiian Room of the Baltimore Hotel. Tickets, $4.00 each.

THURSDAY, 9:30 A. M.

"What the Natural Gas Companies have been doing to help the Consumer get the greatest value from his Natural Gas Service," H. C. Morris, Dallas, Texas.

Discussion—Public Relations in the Natural Gas Industry, F. W. Stone, Ashtabula, O., Chairman.

H. H. Clark, Peoples Gas, Light & Coke Co., Chicago, Ill., will discuss the Progress Made on Industrial Gas Sales in the Manufactured Gas Business.

Report of the Committee on Standards. H. C. Cooper, Pittsburgh, Pa.; E. D. Leland, Pittsburgh, Pa.

Report of the Publicity Committee. H. J. Hoover, Cincinnati, O., Chairman.

Report of the Committee on President's Address.

Report of the Committee on Place of Meeting.

Report of the Committee on Nominations.

Election of Officers and Directors.

Report of Committee on Final Resolutions.

Adjournment.

FOLLOW DIRECTIONS FOR ONE AND ONE-HALF FARE

1. Tickets at the normal one-way fare for the going journey to Kansas City, Mo., may be bought on any of the following dates (but not on any other date), May 11th to 17th, inclusive. Half fare return trip.

2. Ask the ticket agent for a *certificate*. If it is impossible to get a *certificate* from the local ticket agent, a *receipt* will be satisfactory to be secured when ticket is purchased. Sign your name to the certificate or receipt in ink. Show this to the ticket agent.

3. Immediately on your arrival at the meeting, present your certificate to the endorsing officer, Wm. B. Way, Secretary, as the reduced fare for the return journey will not apply unless you are properly identified, as provided for by the certificate.

Mental ease is a full brother to physical laziness

AROUND THE BELT

New Wells, New Pipe Lines, New Contracts, Additions and Extensions. A Fund of Valuable News Gathered for the Journal Through Many Sources.

ADE PERSONALS

harles G., who was formerly connected with eld Gas Company, Springfield, Ohio, is now lar engaged in the oil business and making arters in Shreveport, La.

a W., of Denver, Colo., was elected Vice of the American Association of Petroleum at the recent annual meeting of that organ

arry, of the Commercial and Securities De Drumright Division, Oklahoma Gas & Elec- ny has been elected president of the Lions it city.

f C., of Clarksburg, W. Va., Superintendent e Natural Gas Company, is on the Board of s for engineers of the State of West Vir-

A. F. has resigned from the post of Assist trader of the Philadelphia Company, Pitts

L. B. at the annual meeting of the Lone ompany of Dallas, Texas, was reelected of that corporation.

W. W. has been re-elected Vice President umbia Gas & Electric Company, New York.

Philip G. at the annual meeting of the Co- & Electric Company, New York City, was sident and Chairman of the Board.

D. F. recently became Assistant to the of the Philadelphia Company, Pittsburgh, Pa.

F. has been appointed to the Sales Depart e Equitable Gas Company, Pittsburgh, Pa. gineer.

y, F. E. has been elected Acting Treasurer ead of the Superior Meter Company, Brook

G. W. has been elected President of the ing Valley Oil & Gas Company, Clarksburg.

Arthur, Jr., who has been filling the post of lent of Production of the Sinclair Oil & Gas n South Texas territory, recently resigned.

John M. formerly in the Bond Department Bullock & Company, Chicago, and A. J. have organized the firm of John M. Moore with offices at 108 S. La Salle Street, Chi new concern will conduct a general business d unlisted securities.

ams of the Kansas Petroleum Corporation ected President of the Oklahoma Geological

Smith, F. B., Assistant to the General Auditor, Okla homa Gas & Electric Company, has been chosen Chairman of the National Electric Light Association Committee on Accounting Service for Member Com panies.

Smith, H. L., formerly Industrial Engineer of the Equitable Gas Company, Pittsburgh, Pa., is now Gen eral Foreman of the Allegheny Heating Company of the same city.

Varner, Dr. H. V., at the organization meeting of the Little Hocking Valley Oil & Gas Company, Clarksburg, West Virginia, was elected Vice-President.

Weather, Dr. W. E., of Dallas, Texas, is the new President of the American Association of Petroleum Geologists.

DECEASED

Algeo, John F., Superintendent for the Sinclair Oil & Gas Company in its Covington, Okla., district, died recently at his home in Tulsa, Okla., at the age of sixty one years.

Mohnard, W. R., former Vice President and General Manager of the Oklahoma Gas & Electric Company, Oklahoma City, died recently at his home in Concord, Cal.

ELECTED

NEW YORK, New York City. At the annual meeting of shareholders of the Columbia Gas & Electric Company, J. L. Clarke, President of the American Exchange National Bank, Marshall Field of Marshall Field, Flore, Ward & Company, J. W. Harriman, President of the Harriman National Bank, and Harold Stanley, Vice President of the Guaranty Trust Company of New York were elected directors of the Columbia Gas & Electric Company. Other directors were re-elected.

HOUSTON, Dallas. At the annual meeting of the stockholders of the Lone Star Gas Company, directors were elected as follows: J. B. Downing, A. B. Parsons, M. W. Hahan, E. E. Chase and R. A. Crawford. Officers elected by the directors are: J. B. Downing, President; R. A. Crawford, First Vice-President and General Manager; W. M. Hahan, Second Vice President; D. J. Cobb, Secretary and Treasurer; E. E. Chase, Operating Manager; K. F. Grimsby, Gathering Manager; H. A. Jackson, Assistant Secretary and Treasurer; H. G. Guantanar, Assistant Secretary and Treasurer; E. E. Dove, Assistant Treasurer, and E. J. Cobb, Assistant Secretary.

One of the best things a salesman can learn is how to make a long story short

to supply from the gas fields in the Panhandle

GENERAL

ARKANSAS *Fayetteville*. The El Dorado Gas Company [illegible] No. 1 well on the Gaddy lease [illegible] reports a production of 10,000,000 cubic feet [illegible] 100 barrels of oil

COLORADO *Denver*. A shale oil plant is being [illegible] at a point fourteen miles north of this city [illegible] of the plant is 100 barrels a day, and cost $60,000 [illegible] It is called the Indian [illegible] Plant. The project is promoted by Colorado [illegible] capitalists. The plant operates on the process employing the Brown retort. The inventor of the process is Harry L. Brown of Newark

KANSAS CITY *Johnson County*. L. B. Slick of [illegible] has completed in the Louisburg field [illegible] gasser at a depth of 822 feet

KENTUCKY. Reliable sources inform us that a [illegible] which reached our editorial department to the effect that the use of natural gas for the purpose of manufacturing carbon black has been prohibited by state [illegible] legislature is erroneous. The facts in the case are that a bill prohibiting the manufacture of carbon black in certain localities of the state was passed by the legislature but this bill was [illegible] the Governor. Consequently the industry of manufacturing carbon black from natural gas [illegible] has not suffered curtailment

MISSOURI *Hannibal*. A six inch pipe line is [illegible] by A. C. Glassell and associates from [illegible] Company's gasser on the Mayfield farm, [illegible] a distance of seven miles. The output from [illegible] well has been contracted for by Glassell [illegible]

[illegible]. A well drilled in by the Arkansas Natural Gas Company in 1918 near this place reached [illegible] and after blowing off the oil [illegible] gas and a small quantity of oil

[illegible]. Authorities in charge of the [illegible] expect to increase the [illegible] which represents expenditure [illegible] the company since the value of the plant [illegible] 1918

[illegible] The American Fuel & Oil Company [illegible] has [illegible] the drilling of twenty wells [illegible] A well of 1,000,000 cubic feet [illegible] the company

[illegible] The Oil Run Company has [illegible] a very good gasser on the McCormick farm near [illegible] The output of the well has been [illegible] the Ohio Fuel Supply Company

Kentucky. The Swingle Oil & Gas Company [illegible] test on the Harrington farm in Brush Creek [illegible] and has a good production. The output of the well will be piped to Kenwill. According to reports a number of new locations have been made in this field and the [illegible] will be more highly tested and developed

OKLAHOMA. According to a decision by the Supreme Court on state matters pertaining to the State of Oklahoma [illegible] natural gas [illegible] regulated by the State [illegible] delivered

[illegible] Creek County. Wade [illegible] and associates on Bois [illegible] have completed a good gasser [illegible] No. 1 on the Sanger property [illegible] 14 [illegible] gas in the Dutcher sand at 2,475 feet

The Pearce Oil & Gas Company on No. 1 on the White tract [illegible] 25 [illegible] have a good gasser at 2,083 feet. Production was reached in the Dutcher sand

Hughes County. Reed and associates [illegible] their wildcat well on the Sewell farm [illegible] 17,000 [illegible] 4,000,000 cubic feet of gas at 1,980 feet. At 1,915 feet the [illegible] developed salt water

Kay County. No. 1 drilled [illegible] Mercantile & Water on the McGee property [illegible] 10,000,000 [illegible] feet at 835.50 feet. The [illegible] 24.25 [illegible]

Osage County. The [illegible] Oil Company has completed a 1,500,000 [illegible] gasser on the Hicks farm, [illegible] 20 [illegible]

Oklahoma City. A [illegible] has been formed by the employees of the Oklahoma [illegible] Oklahoma Gas & Electric Company. The [illegible] to the acquisition of shares of the company's 7 per cent preferred stock [illegible] common stock. Officers are H. L. Jones, President; [illegible] Secretary; [illegible] McRath, Treasurer; [illegible] A. A. Fisher, W. [illegible] Emerson and [illegible] with seventy charter members

[illegible] The Supreme [illegible] reported the Oklahoma Natural Gas [illegible] amount of [illegible] standard [illegible] being the [illegible] making a [illegible] fund [illegible]

[illegible] property [illegible] 2,000,000 [illegible] Stanolind [illegible] Kerr [illegible] Dutcher [illegible]

[illegible] Stanolind [illegible] President [illegible] Western [illegible] feet [illegible]

[illegible] Company [illegible] gas [illegible] Oklahoma [illegible] natural gas [illegible]

He who takes good care of the present, need never worry about the future

PENNSYLVANIA—*Claysville*—On the Elmer Martin farm, Coon Island, the West Virginia Natural Gas Company has completed a light gasser.

Greene County—The Griffith Oil & Gas Company at their test on the Griffith farm, Springhill township, has completed a well estimated to have production of more than 2,000,000 cubic feet.

Greenburg—It is reported that the Duff Gas Company of Pittsburgh has filed leases on more than 2,000 acres in Salem township at a point near Harvey's Five Points. The initial well is to be drilled on the Mack Frye farm.

Pittsburgh—A merger has been effected by which the Arkansas Gas Company has taken over the Plymouth Oil & Gas Company, the Benedum Trees Oil Company, and the Little Prairie Oil & Gas Company. Four hundred and six producing wells and as well considerable undeveloped acreage are part of the property acquired.

Redd's Mill—A good flow of gas has been developed by the Greensboro Natural Gas Company on the Frank Johoskey farm at a depth of 1,700 feet.

The Monongahela Bellewood Gas Company is reported to have developed a flow of gas in a drilling on the McMillan farm. The gas was found at a depth of 1,000 feet, the drill penetrating several veins of coal.

Washington County—In Caton township, Hughes & Day's test on the Dr. George Kelly farm is reported a good gasser in the fourth and fifth sands.

In South Franklin township, the Dunn-Orville Oil Company has drilled No. 4 on the Adam Weir farm through the Big Injun sand. It is a fair gasser in that formation.

In the same district, the Carnegie Natural Gas Company is due in the sand at a test on the S. A. Dague farm.

TEXAS—*Carthage*—No. 1 of the Bethany Oil & Gas Company on the Gulley tract, after being abandoned some weeks ago when the casing was shot off at 1,900 feet, has "blown itself in" and is reported to be yielding 6,000,000 cubic feet of dry gas. This well extends the shallow gas field a distance of three miles southeast from proven territory.

The Texas Company has completed a 20,000,000-cubic foot gasser in this district. The well came in at a depth of 1,900 feet.

Dallas—The Lone Star Gas Company has let contracts covering the installation of thirty gas compressors in the several fields in which the company operates.

Three Rivers—The Three Rivers Production Company has let the contract for the construction of a pipe line from the Reagen well into this city, a distance of four miles.

Webb County—The Carolina-Texas Oil Company has brought in No. 1 on the Barnesley property, and reports a gasser estimated at 25,000,000 cubic feet. The location is eight miles north of Torrecillas.

Wichita County—The Gulf Company in its first test on the Burk Burnett farm, is reported to have completed a gasser of 60,000,000 feet capacity in the 2,000-foot sand.

Wortham—The Texiana Company is reported to have a gasser on the Wright farm, two miles distant from town, yielding 5,000,000 cubic feet of gas from a depth of 1,300 feet.

Young County—The Hobbs-Haskell oil interests have completed a 16,000,000-foot gasser on the J. J. Scott tract, South Bend townsite. The gas was drilled into at a depth of 3,500 feet. The product of the well has been contracted for by the Ranger Oil Company.

Zapata County—The Zapata-Memphis Oil Syndicate has completed its No. 1 well, some distance from Mirando City, Mirando district, and reports a 4,000,000-foot flow.

WEST VIRGINIA—*Braxton County*—The West Virginia Dome Oil & Gas Company's test in Otter district is a light gasser in the salt sand.

The Lewis Development Company has completed a light gasser in the Big Injun sand in its location on the Singleton farm, Salt Lick district.

Calhoun County—In Washington district, the Hope Natural Gas Company's test on the E. C. Knotts farm is dry and abandoned.

In Washington district, Norris & Company's test on the Nancy Jarvis farm has developed a light show of oil and gas in the salt sand.

Doddridge County—Gassers outnumber the oil producers in the late completed list in West Virginia.

In West Union district, the Columbian Carbon Company got a fair gasser in the Big Injun sand at No. 45 on the Lewis Maxwell tract.

Gilmer County—A production of 168,000 cubic feet of gas was reported on the completion of the Mary C. Henderson No. 1 well being drilled by the Gilmer Oil & Gas Company in Center district. The depth of the well is 2,637 feet.

Harrison County. In Sardis district the Delva Gas Development Company has drilled the No. 2 well on the Thomas L. Backus farm through the Gordon sand, and it is a duster in that formation. It will make a fair gasser in the 50 foot sand. This well was drilled to a total depth of 2,973 feet.

Jackson County. On the Ohio river, near Polk station, Grant district, the Carter Oil Company has completed in the Berea grit its test, a semi wildcat, on the D. Dewitt farm. No oil was found in this well, but has a gas pressure in the Berea grit estimated at [illegible] cubic feet a day.

Kanawha County. In Pestona district, the Columbian Carbon Company has a [illegible] foot gasser in the Berea grit at a test on the L. V. and L. H. Hudson farm.

The Peerless Carbon Company on Leatherwood creek, near Sarely district, in their No. 5 on the James D. White farm have completed a good gasser. This company has tested its No. 6 on the same tract.

Lewis County. In Carroll district, the Cambridge Carbon Company got a [illegible]-foot gas well in the Berea sand at a test on the Thomas Bay farm.

In Carroll district the Huntington Gas and Development Company has a gasser in the Big Injun sand at a test on the Marine Johnson farm.

Marion County. In Paw Paw district the Owensville & Machine Company has now drilled its gasser on the Charles O. Lloyd farm through the Big Injun sand.

Marshall County. In Liberty district the Marshall Reserve Oil & Gas Company's test on the Susanna Wise farm is a gasser in the Big Injun sand.

Pleasants County. A good gasser has been completed by E. N. Rinehart at his test on the B. C. Bowie farm. No gas was found in the Maxon sand.

In Clay district, Yates, Flanigan & Company have a Big Injun sand gasser at a second test on the William Miller farm.

In Murphy district, H. H. Satterfield has rigged up to drill on the J. W. Grim farm.

In Union district the Carnegie Natural Gas Company has started to drill a test on the J. M. Boyce farm.

Tyler County. In Curtis district, the United Fuel Gas Company has a gasser in the Berea grit at a test on the J. W. Fields farm.

Wirt County. In Burning Springs district, on the waters of Straight Fork, Harry P. Camden has completed the first well on the Newton Kemp farm and has found a gas well.

Wood County. The Hudson Oil Company's test on the Hugh Betts farm is reported a light gasser in the Berea sand.

ONTARIO. *Toronto.* It is reported that according to an act of legislation, government control of natural gas in Western Ontario will be abandoned.

MEMBERS OF ASSOCIATION OF NATURAL GAS SUPPLY MEN

ASSOCIATION OFFICES

905 Oliver Building, Pittsburgh, Pa.

DIRECTORS

FRED A. MILLER	F. R. HUTCHINSON
T. C. CLIFFORD	A. W. THOMPSON
L. A. ADAMS	WM. PATTERSON
O. F. FELIX	R. A. McKINNEY
W. B. GLOVER	F. W. MINER
WM. B. WAY	L. P. SUTTER
E. S. ROONEY	GEO. D. ROPER
WM. McKEE	HUGH TRIMBLE

Acme Fishing Tool Company, Parkersburg, West Va.
Ajax Iron Works, Corry, Pa.
American Atmos Corporation, Pittsburgh.
American Foundry Construction Co., Pittsburgh, Pa.
American Heater Corp., St. Louis.
Anchor Packing Co., Pittsburgh.

Bailey Meter Co., Cleveland.
Baltimore Gas Appliance & Mfg. Co., Baltimore.
Bastian-Morley Co., La Porte, Ind.
Bartlesville Supply Co., Bartlesville, Okla.
Becker Co., Newark, O.
Bessemer Gas Engine Co., Grove, City, Pa.
Black, Sivals & Bryson, Bartlesville, Okla.
Black Steel & Wire Co.
Borden Company, Warren, Ohio.
Bovaird & Seyfang Mfg. Co., Bradford, Pa.
Brandon, Arthur H. Co., Toledo.
Bradford Motor Works, Bradford, Pa.
Bridgeport Mch. Co., Augusta, Kan.
Bristol Co., Waterbury, Conn.
Broderick & Bascom Rope Co., St. Louis.
Bryant Heater & Mfg. Co., Cleveland.
Builders Iron Fdy., Providence.
Byers, A. M. Co., Pittsburgh

Chaplin-Fulton Mfg. Co., Pittsburgh.
la.

, W.Va

Wm. M. Crane Co., New York.
Cutler Hammer Mfg. Co., The, Milwaukee

Dayton Pipe Coupling Co., Dayton.
Davison, N. C., Gas Burner & Weld'g Co., Pittsburgh
Deck Tank Co., Okmulgee, Okla.
Doherty & Co., Henry L., New York.
Dresser, S. R., Mfg. Co., Bradford, Pa.
Duquesne Burner Service Co., Pittsburgh.

Economy Stove Co., Cleveland, O.
Economy Burner & Engineering Co., Pittsburgh
Equitable Meter Co., Pittsburgh.
Estate Stove Co., Hamilton, O.

Fenwick-Reddaway Mfg. Co., Newark, N. J.
Fitler, Edwin H. Co., Philadelphia, Pa.
Foxboro Co., The, Foxboro, Mass.

Frick & Lindsay Co., Pittsburgh.

Garlock Packing Co., Palmyra, N. Y.
Gas Appliance Co., Cleveland.
Gas Engineering & Const. Co., Pittsburgh.
General Gas Light Co., Kalamazoo.
Germer Stove Co., Erie.
Gilfilan Machine Works, Ebenezer, N. Y.
Goodrich, B. F. Co., Akron, O.
J. H. Grayson Mfg. Co., Athens, Ohio.
Grinnell Co., Providence, R. I.
Guiberson Corporation, Dallas, Tex.

Hammon Coupler Co., Pittsburgh
Hays Mfg. Co., Erie
Hart Mfg. Co., Cleveland
Hazard Mfg. Co., Chicago
Heeter, C. M. Sons & Co., Inc., Butler, Pa.
Hewitt Rubber Co., Pittsburgh
Hoffman Heater Co., Lorain, O.
Hope Engineering & Supply Co., Pittsburgh.
James Howden Co. of America, Wellsville, N. Y.
Humphrey Company, Kalamazoo, Mich.

Imperial Belting Co., Chicago, Ill.
Ingersoll-Rand Co., Pittsburgh.
International Derrick & Equipment Co., Columbus.

Jarecki Mfg. Co., Erie.
Jones & Laughlin Steel Co., Pittsburg, Pa.
S. M. Jones Co., Toledo.

Kisselman & Co., Parkersburg, West Va.
Kootz & Stroehman, Parkersburg, W. Va.
Koppers Co., Pittsburgh, Pa.

Larco Wrench & Mfg. Co., Chicago.
Lattimer-Stevens Co., Columbus, O.
Leschen, A. & Sons Rope Co., St. Louis.
Lucey Mfg. Corp., Pittsburgh.
Ludlow Valve Mfg. Co., Pittsburgh.
Lunkenheimer Company, Cincinnati, Ohio.

MacWhyte Co., Pittsburgh.
Manhattan Rubber Mfg. Co., Passaic, N. J.
McKann, J. B., Fishing Tool Co., Parkersburg, W. Va.
Metric Metal Works, Erie.
Minneapolis Heat Reg. Co., Minneapolis.
Moon Mfg. Co., The, Chicago.
Moore, Lee C. & Co., Inc., Pittsburgh.
Moser Mfg. Co., Kane, Pa.
Mueller H. Mfg. Co., Decatur, Ill.

National Supply Co., Pittsburgh.
National Transit Pump & Mach. Co., Oil City, Pa.
National Tube Co., Pittsburgh.
Natural Gas Industry, Buffalo.
New Bedford Cordage Co., New York City.
New York Belt'g & Pack'g Co., New York.
"1900" Washer Co., Binghamton, N. Y.
Northrup Equipment Co., Parkersburg, West Va.

Ohio State Stove Co., Columbus, O.
Oil & Gas Journal, Tulsa, Okla.
Oil City Boiler Wks., Oil City, Pa.
Oil Trade Journal, New York.

Oil Well Supply Co., Pittsburgh.
Oxweld Acetylene Co., Chicago.

Parkersburg Mach. Co., Parkersburg, W.Va.
Parkersburg Rig & Reel Co., Parkersburg, W. Va.
Peerless Heater Co., Pittsburgh.
Pennsylvania Furnace & Stove Co., Warren, Pa.
Petroleum Publishing Co., Tulsa, Okla
Petroleum Supply Co., Steubenville, O.
Pittsburgh Meter Co., East Pittsburgh.
Pittsburgh Reinforced Brazing & Mach. Co., Pittsburgh.
Pittsburgh Supply Co., Pittsburgh.
Pittsburgh Valve & Fittings Co., Pittsburgh.
Pittsburgh Valve, F'd'y & Const. Co., Pittsburgh.
Pittsburgh Water Heater Co., Pittsburgh, Pa.
Plymouth Cordage Co., N. Plymouth, Mass.
Pratt & Cady Co., Inc., Hartford, Conn.
Precision Instrument Co., Newark, N. J.
Prichard Supply Co., Mannington, W. Va.

Rathbone, Sard & Co., Aurora, Ill.
Rathbun-Jones Eng. Co., Toledo.
Reid, Jos., Gas Engine Co., Oil City, Pa.
Rensselaer Valve Co., Pittsburgh, Pa.
Reliable Stove Co., Cleveland.
Republic Iron & Steel Co., Youngstown, O.
Republic Rubber Co., Youngstown, Ohio.
Republic Supply Co., Houston, Tex.
Reznor Mfg. Co., Mercer, Pa.
Riesenman Mfg. Co., Ltd., Franklin, Pa.
Robbins Publ. Co., New York.
Robinson Packer Co., Tulsa, Okla.
Roebling, John A. Sons Co., Trenton, N. J.
Geo. D. Roper Corp., Rockford, Ill.
Rossendale-Reddaway Belt'g & Hose Co., Newark, N. J.
Ruud Mfg. Co., Pittsburgh.

Safety Gas Stove Lock Co., Nashville, Tenn.
Sands Mfg. Co., Cleveland.
Scott Gas Appl. Co., Washington, D. C.
Spang, Chalfant & Co., Pittsburgh.
Sprague Meter Co., Bridgeport, Conn.
Stacey Mfg. Co., Cincinnati.
Stitt Ignition Co., Columbus.
Stokes Deep Well Co., Shreveport, La.
Strauss Gas Iron Co., Philadelphia.
Superior Tube Co., Kansas City, Mo.

Taylor, W. P. Co., Buffalo.
Toledo Pipe Thr'd'g Mach. Co., Toledo, O.

Union Rubber & Asbestos Co., Trenton, N. J.
United Seal Co., Columbus.
Upson-Walton Co., Cleveland, O.
U. S. Rubber Co., New York.

Walker & Pratt Mfg. Co., Boston, Mass.
Welsbach Co., Gloucester City, N. J.
Westcott Valve Co., Seneca Falls, N. Y.
Westinghouse Elec. & Mfg. Co., Pittsburgh.
Wheeling Steel Products Co., Wheeling, W. Va.
Williams Tool Co., Erie.
Witman & Co., Columbus.
Williamsport Wire Rope Co., Williamsport, Pa.
Worthington Pump & Mach. Corp., Buffalo.

Yorke Derrick Co., Washington, Pa.
Youngstown Sheet & Tube Co., Youngstown, O.
Young, Wm. T. Drilling Eng. Co., Oil City.

FROM THE EDITORIAL MAIL BAG

DISTANCE LENDS ENCHANTMENT TO THE WETS

FROM the tone of the following paragraphs the editor of a gas contemporary across the ocean must have among his exchanges from the U. S. some house organ of the "wets" in America.

At a distance things when exploited for the benefit of some store-monger are like the tiny movie picture magnified many times in order to make it effective. It's rather amusing to read these paragraphs.

We had not learned over here that the water heater manufacturers of the United States had converted their sales organizations and factories into still coal product organizations for the supplying of plumbers with "still" necessaries, nor that our plumbers had departed from the ways of lawfully upholding the Constitution of the United States of America.

There are always some black sheep, however, the daily press, the propagandists and the junk heaps notwithstanding. Americans as a people are loyal to their country and its laws.

Here are these word-cartoons:

"There is a lot of old junk lying about most American towns in the shape of ancient coal ranges and incandescent gas cookers and gas fires. The Citizen's Gas Light Company of Quincy, Massachusetts, conceived a plan to get rid of the collection in that community. In order to discover the oldest coal and gas ranges they offered a prize of a $70 new gas range. Each competitor had to send in a coupon form, and this provided the company with a valuable mailing list. The manager was astounded but exasperated. He had never imagined that there was so much ancient scrap in Quincy."

• • • • •

"Then the Citizen's salesmen discreetly descended on the owners of the old junk, and after peaceful penetration into the houses the real work began. The advantages of new, up-to-date appliances were explained, an offer was made to exchange new lamps for old, an allowance based on the value of the equipment replaced being made. The scheme was well advertised. A top lighter was a free gift with each range. This novel scheme has not yet reached its conclusion, but all Quincy is talking about the competition, and the Citizen's salesmen are having the time of their lives."

• • • • •

"Prohibition in the United States has proved a fine but disorganization for the Seattle plumbers. People cannot go drinks in the saloon bar, as in the old days of freedom, so they have to contrive and make their own. Some of them have become mighty clever at the game. But the plumbers, they will soon rival Henry Ford and the Astors in wealth because every copper coil for gas heaters they can make or import is snapped up by some thirsty man who has resolved on installing an alcohol still in his own back kitchen. These gentlemen are called moonshiners, why it is not easy to understand, except on the principle that they work in the dark and dodge the moonshiner.

• • • • •

"Last year, when Pussyfoot Johnson's brigade was on the rampage there was a healthy business in gas heater coil in the Seattle district. The master plumbers saw that their lucky star was in the ascendant and they gathered in a rich harvest by charging more for the copper coil than for the coal and gas heater combined. So great was the public demand for coils that one store was burgled and fifty transferred for duty in one night. This was all very dreadful and very much upset the cranks who were insistent on dry Seattle, but worse was to come.

• • • • •

"An ingenious master plumber with a magnificent cave on the outskirts of Seattle conceived the idea of extending his business for the accommodation of the thirsty ones. He not only sold copper coils, but he made a complete still and had a recipe for making a good home brew. He stocked for sale packages of hops, barley, rice and liquid malt, and these were made up in portions suitable to the amount of beverage required in one brew. Nothing could be more convenient for the opponents of Prohibition, and all in the name of gas. Truly, gas is a marvellous power in the human economy."

GASES FOR HIGH SULPHUR CRUDE OIL

THE American Petroleum Institute, U. S. Bureau of Mines and the Public Health Service have entered into a cooperative agreement which provides for an investigation of petroleum gas possessing [illegible] oils of a high sulphur content. Deaths and personal injuries have resulted to the men exposed to the vapors and gases from some of these crude oils. It has been found that some of their products have a [illegible] effect and cause conjunctivitis and dermatitis to the workmen. The constituents of the gases are not definitely known, except that [illegible] present. The effects [illegible] have not been [illegible] at which these vapors and gases become dangerous.

The [illegible] research.

[illegible] actual [illegible] the various methods [illegible] the engineers from these

Believe this: The best opportunities are of the home-made variety

gases both at the wells, refineries and storage tanks, and from stills; collection of data relative to accidents; and analysis of gases and methods of analysis.

2. Investigtion of the relation of causes of conjunctivitis to causes of other accidents relating to crude oil gases.

3. Study of gases:
   - *a.* Collection of samples.
     1. At wells.
     2. From ships.
     3. From storage tanks.
     4. From stills.
   - *b.* Laboratory investigation.
     1. Distillation of the crude oil.
        - *a.* By vacuum.
        - *b.* By low temperature.
        - *c.* Collection of distillates.
          1. By absorption.
             - *a.* Solid absorbents.
             - *b.* Liquid air.
   - *c.* Analysis of gases.
     1. From field samples.
     2. From collected distillates.
   - *d.* Physiological and pathological effects of the gases
     1. On animals.
     2. On men, as obtained from field work.

4. Protective measures.
   - *a.* Rules for self-protection.
   - *b.* Gas mask.
   - *c.* Self-contained breathing apparatus.
   - *d.* Other means of protection.

5. Treatment.
   - *a.* First-aid or emergency.
   - *b.* Curative.
     1. Medicinal.
     2. After.

As the investigations and experiments proceed, changes in the foregoing outline may be necessary.

LOCATING OF GAS PIPE

AT a meeting held across the water under recent date, Mr. C. H. Webb, of Stourbridge, England, told a very interesting story of a "pipe locator", to the members of the Midland Association of Gas Engineers and Managers then in session. Mr. Webb, according to "The Gas Engineer", describes the matter as follows:

"The device consists of a battery of dry cells, or an accumulator, whichever might be preferred. Dry cells are erratic in their action, and do not give much power, so that an accumulator, especially in the case of works with generating plant, is very convenient. The battery is connected to the primary circuit of a special induction coil, and in addition there is a pair of telephone receivers connected to the listening coil. Wires from the secondary circuit of the induction coil are connected up in any convenient way to cause a current to flow through the pipes to be located underground. For instance, if it is the service pipe from the main to a house the secondary circuit of the induction coil would be connected to the meter inlet on one terminal and from the other terminal a loose ground wire would be run, say to an adjacent lamp post, or possibly to the meter of the next house. On starting the primary current the secondary current is induced and flowed through the circuit formed from the gas meter, along the service pipe, along the main to the lamp post and back, through the loose ground wire. The area so described forms a field with a current flowing all around it. The operator now takes the listening coil, which is a light coil laid on a wooden frame, in his hands, and places the two telephone receivers on his ears, which receivers are in circuit with the coil, if he then stands in the field current is induced in the coil which he carries and a similar buzzing to that given by the interrupter of the induction coil is heard through the telephone receivers. As soon as the portable coil comes over the edge of the field the buzzing a weaker sound. By this means the track of the ser- outside the field, the buzzing recommences, but has quite is no longer heard. If it is carried further and taken vice pipe can be traced exactly.

When in use the operator takes up a position where he is more or less certain that he is in the field and then moves until he notices a difference in the tone of the buzzing. He is then over one of the boundaries of the field, either the ground wire or the underground pipe. It is usually convenient to go to the ground wire to make sure that the circuit is well established. He can then move across the field until the difference in sound is detected, when he knows that he is over the desired pipe. He then swings the coil from side to side across the pipe, and at the same time walks backwards, tracing the track of the pipe on the ground with his foot.

The whole apparatus is extremely simple, and anyone can learn to use it in the course of half-an-hour; but, of course, with greater practice one can gain speed and experience in interpreting the sounds through the telephone receivers. The outfit as received from the makers is packed in a small box weighing about 20 lb. To the equipment has been added another box with about 110 yards of 3.22 cab tyre sheath-cable wound in a drum, the inner end of the wire being connected through the axle to a terminal on the outside of the box, so that when laying the ground wire all that is necessary is to place this box near the wireless box, connect a secondary terminal of the induction coil to that of the axle of the cable box, and run out sufficient cable from the box to make the necessary connection.

The particular apparatus in use is of American origin, but there is also an English made article on the market. The apparatus gives astonishing results, is in frequent use, and has saved many times its cost."

Natural Gas Convention

Kansas City Again Proves Popular as Meeting Place for Natural Gas Men

FOR a year past we have had our eye on the date and place of the convention of the Natural Gas Association of America which was scheduled for Kansas City, May 15th-18th.

It was years ago that the convention last met in Kansas City and the western interests felt it most desirable that the meeting be held in the west this year, not necessarily with an idea that turn-about the conventions should be held east and in the west, but that the west might have a western manifestation, and the opportunity for a shorter railway trip, thus enabling more of the western men to be present at the convention than could possibly be with the meeting held in the east.

It has been decided to hold the next meeting in Louisville, Ky., thus to swing around the circle toward the east where undoubtedly the meeting will be held in 1924.

Mr. I. H. Denning has made a most excellent president and his plans for papers and discussions were well mapped out, the only difficulty being that in some instances the chairmen having in charge certain discussions had not found it possible in advance of the meeting to observe what their several followers would present in the way of discussions, therefore in several presentations there was really much duplication, and the time thus was shortened which might well have been used in other directions.

The list of papers and discussions appearing on the official program were as follows:

The Industrial Promotion, J. D. Dunn, Kansas City, Mo.

Report of the Portable Committee, W. B. Du Bois, Columbus, O., Chairman.

Report of the Committee on the Promotion of Boiler Jobs, H. Cooper, Pittsburgh, Pa., Chairman.

Discussion: Production Problems, F. L. Chase, Dallas, Texas, Chairman.

Talks to the Public the Story, C. F. Blaisdell, Cleveland, Ohio.

What the Natural Gas Companies have been doing to help the Consumer get the greatest value from the Natural Gas Service, H. E. Brown, Dallas, Texas.

Discussion: Public Relations to the Natural Gas Industry, F. W. Shaw, Indianapolis, O., Chairman.

E. G. Chace, Peoples Gas, Light & Coke Co., Chicago, Ill., Progress Made on Industrial Gas Sales in the Manufactured Gas Business.

Report of the Committee on Uniform Accounting, Geo. W. Rosdale, Pittsburgh, Pa., Chairman.

Standardization in the Natural Gas Industry, H. C. Cooper, Pittsburgh, Pa.

Discussion: Transmission of Natural Gas, Burt R. Ray, Bartlesville, Okla., Chairman.

Discussion: Distribution of Natural Gas, F. F. Schauer, Pittsburgh, Pa., Chairman.

Report of the Joint Committee on Electrolysis, F. M. Tratt, New York City, Chairman.

Report of the Committee on Standards, H. C. Cooper, Pittsburgh, Pa., E. D. Leonard, Pittsburgh, Pa.

Report of the Publicity Committee, H. J. Hunter, Cincinnati, O., Chairman.

The sessions were held throughout the 16th and 17th, and the morning of the 18th, while the exhibition was open for the consideration of gas-men Monday morning the 15th, and remained open until noon of the 18th when the dismantling process was taken in hand by the exhibitors.

The exhibits were in many respects the same (of course with variations) that have been shown upon former occasions when they have been quite extensively reviewed in our columns, therefore to now tell of these in detail would be largely to duplicate what we have before recounted in connection with the shows of the Natural Gas Supply Men's Association.

There were several more exhibits of gas burning appliances than have appeared at former meetings, thus indicating a trend on the part of the industry toward natural gas companies handling gas appliances, but the time, however, will never come when the merchant will not be a large factor in the field of sales, so long as gas appliances find a market and that time we realize is practically unlimited in view of the fact that as by degrees natural gas diminishes in volume, manufactured gas will become its successor.

We shall publish various of the papers presented at the convention sessions, also the president's address and such other matter as is available. These offerings we know will prove of much interest to our readers.

A large curtain was stretched across one end of the auditorium, thus the exhibits were separated from the meeting quarters, but only by the curtain, making it necessary that as little noise as possible be created on the exhibition side of this dividing line while the sessions were in order.

As at Cincinnati a year since when the association met within the gates of that municipality, various of the gas appliance manufacturers presented wares that were subsequently given away to the public attending the exhibition from [illegible] o'clock in the afternoon until 10 o'clock in the evening. Drawings were held every half hour only, however, while the audience was made up of home people.

The admission to the exhibition hall was free, [illegible] each person receiving a ticket at the door bearing a number, the duplicate of which was placed in a receptacle preparatory to the drawings that as we have said took place each half hour, while the [illegible] was present, thus when the people of Kansas City became

aware of the free gift idea, the audience increased in volume until toward the last of the several days' display the attendance was very large.

The Supply Men furnished luncheons on Monday, Tuesday and Wednesday. These were stand-up affairs and made it possible for gas company representatives to spend the entire day at the hall rather than to break away between morning and afternoon sessions by having to go to a distance for luncheon. This is a plan that has pertained at these conventions for years.

We were exceedingly fortunate in that every day was a bright, cheerful, sunny day, with the exception of but one whereon clouds made themselves strikingly manifest, and for two or three hours there was a sprinkle. Showers, however, appeared but once during the entire period of the convention.

Kansas City is an exceedingly well situated western city, and its interests are indeed varied in number and in fields covered. We look back upon our stay in that city with much pleasure, and we would extend a hearty vote of thanks to our Kansas City and western friends for their most excellent care of those who attended the meeting.

Much credit was due to the local committees having in charge the general matters surrounding a convention. The following well described the situation in the exact words of Mr. Dan C. Hayne, Chief Engineer of the Kansas City Gas Company:

"Mr. W. H. McKenzie was appointed General Chairman of a Local Committee to assist the Secretary and Board of Directors in making arrangements for the Convention in Kansas City. Mr. Frank Carpenter, auditor and assistant secretary of the Kansas City Gas Company, was placed in charge of entertainment, and Mr. Dan C. Hayne, Chief Engineer of the Kansas City and Wyandotte County Gas Companies, was placed in charge of the arrangements at Convention Hall. These three (3) appointments were made by Mr. Wm. B. Way, Secretary of the Natural Gas Association of America.

The work of entertainment, which was under Mr. Carpenter's direction, was ably brought about through the assistance of Mr. Paul C. Ford, Chief Clerk of the Kansas City Gas Company, and Mr. Frank Land, Assistant General Bookkeeper of the Kansas City Gas Company, along with various foremen and employees of the Kansas City and Wyandotte County Gas Companies, sold banquet tickets.

Mr. Hayne was assisted in his work by Mr. C. H. Waring and Mr. W. M. Wood, assistant engineers of the Kansas City and Wyandotte County Gas Companies, and the actual work of installing the exhibits was handled under the jurisdiction of Mr. Charles Holmgren, appliance foreman of the Kansas City Gas Company, assisted by R. R. Johnson, shop foreman of the Wyandotte County Gas Company, and Mr. Benj. Stockton, fitter foreman of the Kansas City Gas Company.

The warehouse and hauling arrangements of getting the exhibits into the building and getting them back to the owners was handled by Mr. Way direct, through a contract entered into with Grant Renne, heavy hauling contractor of Kansas City.

The expense of the gas and water piping was absorbed by the Kansas City Gas Company as a part of their contribution toward the success of the Convention.

The entire supervisory and commercial force of both companies were available and were used from time to time when needed, during the period of the Convention.

The man ordinarily used by Mr. Way in charge of the appliances given to the public, by means of drawings, was unable to attend the Convention, and Mr. Hayne agreed to take care of this work for Mr. Way, in addition to his other duties as an eleventh-hour proposition, and was assisted to a great extent by Mr. N. McManamy, Sales Manager of the Kansas City Gas Compny, and Mr. W. ReBrown, editor of *Natural Gas*.

From the letters of commendation and appreciation which we have already received, we feel sure that the Convention was a success and that our visitors enjoyed themselves while they were in Kansas City.

In this connection, due credit must be given Mr. Geo. E. Nicholson, President of the Kansas City and Wyandotte County Gas Companies, and Mr. C. W. Green, Vice-President and General Manager of the Kansas City Gas Company, as well as Mr. W. H. McKenzie, General Manager of the Wyandotte County Gas Company, for it was through liberality on their part which enabled the two (2) forces to be available for use in making the Convention a success."

The western supplies and equipment manufacturers turned out well, and helped to swell the volume and variety of exhibits shown, while the western gas interests were liberal in their sending of men, in fact the east and the west both sought to do their utmost to make the affair an interesting and profitable one. Our friend, M. W. Walsh, promises us that the affair next year at Louisville, Ky., will keep up the record of these years past which has been that of well planned and well carried-out conventions and exhibitions. The President's address follows:

PRESIDENT'S ADDRESS

L. B. DENNING

I CONGRATULATE the members of the Natural Gas Association of America and of the Supply Men's Association upon being permitted to hold this, the Seventeenth Annual Convention of the Natural Gas Association of America, in this beautiful city, which has been so well named "The Heart of America." Having attended the last meeting of this Association held in Kansas City some years ago, I have personal knowledge of the great hearted hospitality of its citizens and the aggressive spirit of accomplishment which guides their civic conduct. The growing magnitude and importance of the development of the natural gas industry west of the Mississippi river year after year has placed that section on a par with the older fields east of the Mississippi, and it is well that our brethren of the Appa-

(CONTINUED ON PAGE 201)

Deserve these: Respect and love.

Merchandising via Service

Courtesy and Enthusiasm in Service, Two Great Factors in the Success of a Public Utility

In choosing the title "Merchandising via Service" I do not mean the much abused word "service" but service in every way that the word implies service and courtesy on the part of every individual in the organization from the manager to the man in the ditch. The writer

By A. J. GEIG,
Commercial Manager Eastern Wisconsin Electric Company,
Fond du Lac, Wisconsin

MOST men are of the opinion that the average Chinaman, as he is known in America, may be considered unobserving, unimpressionable and more or less of a stoic. To such men the following incident may be surprising. Not long ago a Chinese vegetable dealer entered one of the offices of a Public Utility Company in the West to pay his bill. After finishing his business, he went out to a wagon which was standing in front of the office and filling a basket with choice fruit, brought it back and presented it to the young lady at the counter who had waited on him. The local manager, noticing the incident, stepped up to the Chinaman and told him he considered that he had done a very nice thing and expressed his appreciation by personally thanking him. The Chinaman looked at the manager for a moment and then said, "She smiled and thanked me when I paid my bill." Without another word he went out of the office, climbed into his wagon, and drove away.

If such a little attention is noticed by an unemotional Mongolian, it is fair to assume that the average American will appreciate any similar consideration which tends to demonstrate that his existence is appreciated.

There are today about one thousand gas plants in the United States representing a total investment of [illegible] million dollars. Each one of these plants possesses certain intangible assets, which now and then are inventoried. Among the intangible assets it is as difficult for the uninitiated to appraise in a gas company for courtesy. Yet, if a gas company holds a reputation, it necessarily possesses a valuable asset, maybe an intangible asset for, beyond perhaps, it is the best possible adjunct the gas company has as a revenue producer.

The gas distributing business, as conducted by the Fond du Lac Gas Company, is a vast machine. The essence of operation in connection with the machine is good management, and good management simply means running the business with all parts in harmony. In order to obtain harmony, there must be lubrication, and as oil lubricates the engine and keeps down friction, so does courtesy in business intercourse smooth out the rough places, disarm unreasonable criticism and invite good will.

It is probable there never was a time when public utility companies were as closely scrutinized as they are today. Undoubtedly there are reasons for present conditions in this regard. In the first place, the public has gradually learned that the commodities handled by such corporations, which once were considered luxuries for the few, have now become necessities for the many. In the second place, through newspapers, magazines and other literature, the every day man has learned something more or less correct about the manufacture and distribution of gas, and he considers himself qualified, as a student and consumer, to have something to say on the subject whenever the opportunity occurs. In the third place, it must always be remembered that in the sale of an intangible commodity there is more or less mystery and this feature is often the cause of criticism and controversy. Further during recent years, almost every state has appointed a public utility commission and through the commissions labors the troubles of consumers and the difficulties of the companies are alike laid bare to the public eye. No matter what may be said, truthfully or otherwise, about the methods of public utilities in the past, it may be safely asserted today that most utilities have put their houses in order, so that they are able to withstand the closest scrutiny of friend or foe.

Two great factors in the success of any gas company are courtesy and enthusiasm. These attributes must not be possessed solely by the president or manager, but must prevail throughout all departments and in all ranks. It is true that a utility company's business may be the only one of its kind in the community and that the public must go to it if service be desired. It is well to remember that that condition does not make the public less critical. If consumers are treated with consideration it is particularly pleasing to them but if with discourtesy it rankles through and through. Because of the fact that they have no alternative, but must continue to do business with

reconcile the statement of an Oklahoma attorney effect that with lowering pressure the speed of ter was increased, and yet such statement has ade

r the Bureau of Mines and many gas interests cussing the subject of gas conservation, we still ins coal stoves being heated with pipe-burners, ren without air mixers, and it would seem that ugh survey of all appliances using gas should be s gas companies and if needs be, under authority utilities commissions to stop the use of gas under nditions

type of wasteful burner that was formerly used it is to a vast extent in use today under high r service (inefficient in periods of low pressure), the burner that must shoot a flame approxi- two or two and a half inches high in order to he vessel should as rapidly as possible be re- ce replaced as to eliminate the extreme waste ist follow

e manufactured gas field the ranges used are th open tops, with a very few exceptions, and ners are placed from one to one and a quarter below the vessel this being the proper distance of low pressure service, the kind of service that be rendered in natural gas practice

r are two or three makes of gas ranges originally ce manufactured gas, but are now offered for gas as well, that are put out with closed tops, th placed burners These are an exception, and m the ordinary closed top class They work ds well under low pressure conserving the heat he top by certain forms of baffling These are ed when the statement is made that gas ranges natural gas field should be built after the usual open top manufactured gas ranges

March 20th 1922, the United States Supreme confirmed the "penalty discount" phase as both and enforced in the State of Oklahoma, indi as we understand it, that four ounces pressure been established as a standard distribution pres e the natural gas that the following penalty ing gas company charges are allowable to the d for the pressure falling below the agreed upon mer standard

understand it briefly under this ruling if the e falls to three ounces pressure the consumer ves five per cent of the bill, if two ounces ure gives fifty per cent of the bill if one ounce ure gives twenty-five per cent of the bill, and pressure should fall below one ounce, he would thing

sweeping discount would seem unreasonable and in view of the fact that as appliances are made lered for sale and are in use, wherein cooking r low with as low as one ounce pressure or that pressure should fall below four ounces of w would only affect those in communities who ranges built upon the old principle of low burner and with the old type of closed top the appliance rather than the pressure being at fault

We agree that a reasonable pressure should be main tained by the gas companies in view of the fact that on their lines are installed numberless appliances sold either by or without objection of the gas company which cannot be operated on anything but fairly high pressure Yet the "penalty discount" as set forth would not seem a matter of equity

If in the nature of its business the gas company can not supply gas at former pressures or with uniformity of pressure above some rather low standard then it is certainly the duty of someone to so readjust matters as to make the appliance fit the new conditions of things We are not saying whether the burden of raising burners on ranges and the employing of open tops on the older types of ranges not built with the latest types of closed tops should fall upon the gas company or upon the public, but we believe in view of the fact that low pressures must be the future of the business Proper changes might as well be made now as later on when certainly they must be made

However, the field should not ignore the past helpfulness that has existed through the services of many of the gas appliance manufacturers who have especially built for the natural gas trade They built to the field as it was, and to meet conditions the gas companies had created We believe these same concerns will fall in line to build for the conditions as they are and will be

These manufacturers should study well the construction of the manufactured gas range and those among these old time natural gas appliance manufacturers who do this will not lose out even with the new gas range competition coming in It will be the old-timer who will not revise his wares and his designs who will lose out

Is the "penalty discount" as applied justifiable Is high pressure on these class justifiable Is the nat ural gas appliance as it exists and still constructed for high pressure in view of the economies accomplished through low pressure and high burners justifiable

If it be true that conservation is best accomplished so far as domestic appliances may be concerned by short flame making necessary a burner [illegible] with [illegible] and a quarter inches [illegible] pressure with air [illegible] conserve gas [illegible] answer to the natural gas [illegible] times are [illegible] discount [illegible] gas company is [illegible] regarding [illegible] render acceptable [illegible]

Is it [illegible] low pressure [illegible] and [illegible] conservation [illegible] fall upon the gas company [illegible] be met in view [illegible] rates for gas [illegible] in order that acceptable [illegible] be rendered [illegible] cannot be rendered [illegible] gas"

One of the best things a salesman can learn is how to make a long story short

CONTINUED FROM PAGE [illegible]

field and of the Mid Continent field should meet and to each other the right hand of fellowship [illegible] and so far as possible solve the common [illegible] that confront the industry no matter in what [illegible] individuals may be engaged in serving to the [illegible] greatest fuel ever produced by nature the [illegible] mother of us all

[illegible] the work of the Association and its [illegible] during the past year let me say that the policy [illegible] and efforts of the Association has been [illegible] helpful [illegible] cooperation toward its members [illegible] individual or company members It has been [illegible] to present and distribute facts and information [illegible] upon the industry and pertinent to the [illegible] day by day without attempting [illegible] any particular [illegible] [illegible] the office of the Secretary has [illegible] for the accumulation and [illegible] and necessary information [illegible] which have been issued from [illegible] and through the [illegible] the official organ of the Association [illegible] what we believe to [illegible] in connection with the [illegible] the Supreme Court of the [illegible] the injunction suits brought by the [illegible] Pennsylvania to prevent the enforcement [illegible] West Virginia the effect of [illegible] to seriously limit even to [illegible] the transmission of natural gas from [illegible] West Virginia into the states of Ohio and [illegible] We have cooperated fully with the [illegible] the Bureau of Mines and other [illegible] departments and we believe have [illegible] these departments relations of [illegible] to the end that there may be placed [illegible] natural gas using public the facts [illegible] It has been our aim to tell the truth [illegible] the truth believe that the users of our [illegible] will be fair whenever the [illegible] understanding [illegible]

[illegible] undue optimism I may state [illegible] that the public who are the users of our [illegible] thought these representatives [illegible] commissions and their legislatures [illegible] broad powers of regulation [illegible] leveling a broader knowledge of the [illegible] relations [illegible] the comfort and welfare of the [illegible] I do also [illegible] of conservation the value of natural gas [illegible] I believe this to be the [illegible] the [illegible] natural [illegible] using public the [illegible] and second the [illegible] the part of the gas men in laying before the public problems peculiar to the industry [illegible] I believe that more newspaper space has been used by gas companies within the past year than in any previous five years within my knowledge and this frank publicity coupled with a manifest desire to reach the consumer [illegible] get the most value out of his gas service is bearing good fruit

The question of conservation of gas is more properly the correct use of gas in each case requiring more and more careful [illegible] as to efficiency and [illegible] the public as gas users The matter of using natural gas in the best manner so as to obtain the best results has been given very careful consideration and results by practically all of the companies engaged in the business during the year and also [illegible] Bureau of Standards and Bureau of Mines The Bureau of Mines has to its credit some issued bulletins on the results of these studies and these have been widely distributed by the various companies The question of improved [illegible] appliances and fixtures for domestic use and the proper adjustment of these now in use has also attracted much attention and called for careful thought and [illegible] In this connection I desire to recommend to the Association that a committee be appointed to serve during the coming year whose duty it shall be to [illegible] the existing data and if possible, evolve a type or types of range and fixture which if the Association deems advisable may be recommend for [illegible] I am fully aware that [illegible] I have no desire to impose upon any company or [illegible] anything not [illegible] but it is my thought that the Association should handle this question at least to the extent of making recommendations which can be adopted [illegible]

The Committee on Publicity of the Association of which Mr H L Hoover Director of Public Relations of the Union Gas and Electric Company is chairman [illegible] has rendered a service during the past year [illegible] the Association and the industry generally [illegible] has supplemented the [illegible] of the Association Magazine and [illegible] matters particularly [illegible] [illegible] Bureau of Mines [illegible] [illegible]

SELLING ROCHESTER COMPANY'S STOCK

WILLIAM GOSNELL

THE gospel of being sold to a proposition before you can successfully sell others is being demonstrated every day, not only by the regular selling force, of the Rochester Gas and Electric Corporation, but by other employees who firmly believe in the company and its policies. When an employee has such a conviction it is inevitable that others will be imbued with the same enthusiasm.

A reputable banking house of Philadelphia recently offered to take over enough stock to furnish the company the amount of capital required for the year 1922, but we believe this would not be to the advantage of the company, as it would leave our patrons in Rochester and adjacent territory "out in the cold," and to secure any of the stock a premium above par would have to be paid. This and other offers were turned down for the reason that we feel the local ownership of our stock is advantageous to our customers and of course to the company.

Our policy of giving the public whom we serve either directly or indirectly the opportunity to furnish the capital required to meet the needs of a growing community, has been justified by the fact that we have sold five half-million blocks of our 7% preferred stock in the last three years.

From March 1 to April 18 subscriptions have been received for 3,706 shares of stock which oversubscribes the present issue by 311 shares. The sales for this period represent over 100 per cent. of the amount of stock sold during the whole of last year, a comparison which shows that this security is continually growing in popularity, and that there is a general resumption of business as money rates become lower and conditions begin to approach normalcy.

A Public Utility Stock such as ours, with the element of safety so strongly intrenched in it, combined with the largest return consistent with safety, is being appreciated by conservative investors.

Prizes for the month of March were competed for by the sales force and also by the employees of the company generally, and the results obtained by the prize winners were very gratifying.

A copy of a local paper containing one of this Company's stock advertisements crossed the world and finally landed in a city of China where it was observed by a Mr. Mahoney who was so impressed with the attractiveness and security of this Company's 7% Cumulative Preferred Stock that he wrote to a local bank asking them to purchase a number of shares for him.

The Investment Department on the ground floor of our Clinton Avenue Office was placed where it would be most convenient for our patrons to get information relative to the Company and its capital requirement.—*By courtesy Rochester Company.*

CUSTOMER OWNERSHIP

How Local Investors' Money Assisted Towards Avoiding Bank Panic.

THE customer ownership or local securities selling department of a good-sized electric service company not long ago helped substantially to overcome a potential financial panic in a Western city. A number of small banks had failed and there were rumors prevalent regarding the larger institutions which caused great uneasiness among their depositors. Affairs had reached a point where deposits were being quietly withdrawn and it was feared that there would be runs on the big banks, with calamitous results. The manager of the Company's investment department was in close touch with the situation and observed an unusual increase in the sales of the preferred shares of his organization. He learned that deposits were being taken out of the banks and placed in the Company's securities both as an excuse for withdrawals and on the theory that funds would be safer so invested than in the banks. After a conference with the Company's officials the investment department salesmen were instructed to inform every prospective investor that the Company had implicit confidence in the soundness of the banks, would maintain its own deposits in the customary amount, and wished to decline orders for purchase of its securities from people who were acting principally to withdraw deposits. The banks were advised of the Company's action toward stabilizing conditions. The initiative of the Company was credited heavily in the successful avoidance of what appeared to be an impending crisis.

YOUR JOB

YOUR job is the best job you ever had. It commences where all of its predecessors—whatever their compensation—left off, and is thus nearer tomorrow than they.

Your job is the path which leads through the morass of routine mediocrity, up the sanded slopes to the sunlit peaks of success.

Your job, to carry you furthest, requires the fire of ambition and the light of steadfast ideals.

Your job is your life during the greater number of your waking hours. Dare you hold it lightly? May you at once be false to the job and true to self?

Your job will serve you well in return for your respect and honest devotion—ask of it what you will. It will provide food and shelter; it will give you a fireside for dear ones. It will instruct you, and educate your children. It will give you the fellowship of good books and eventually offer you, in mellow years, the leisure for the enjoyment of travel, art, music—dreams.

Your job—when your time comes for passing on—will have chiseled your record on the monument of time

And other men shall judge you, today, tomorrow and hereafter, by that inscription.—*Courtesy "Men's Wear".*

Heed this: "PREPARE!"

AROUND THE BELT

New Wells, New Pipe Lines, New Contracts, Additions and Extensions. A Fund of Valuable News Gathered for the Journal Through Many Sources

TRADE PERSONALS

[illegible] F. M. [illegible] of the Indian Territory Illuminating [illegible] Company, Pawhuska, Okla., is with the Pawhuska [illegible] Company for the summer, assisting in reducing [illegible] loss.

[illegible] Charles [illegible] is now First Vice President and [illegible] of the Charles F. Noble Oil & Gas Company, [illegible] Okla.

R. C. [illegible], Manager of the Sapulpa Division of the [illegible] Gas & Electric Company, has been elected [illegible] president of the Sapulpa Chamber of Commerce.

[illegible] W. H. [illegible], who is connected with the Oklahoma [illegible] Electric Company, Oklahoma City, Okla., as Gas [illegible] has been appointed Chairman of the [illegible] Court of Honor.

[illegible] Harris of Enid, Okla., has been elected [illegible] of the Oklahoma Natural Gas Company of [illegible]

[illegible] N. J., has been elected to the directorate [illegible] Arkansas Natural Gas Company, Little Rock.

[illegible] Thomas, formerly with the Hale Gas Mixer [illegible] connected with the Sterling Petroleum [illegible] Corporation as Field Manager, operating in Elk [illegible] Kansas.

[illegible] J. B. [illegible] has been elected President of the F. N. Noble Oil & Gas Company, Tulsa, Okla.

[illegible] Karl [illegible] connected with the Ohio Fuel Supply [illegible] as Civil Engineer on the [illegible] engineering department, is now [illegible] Bureau of Internal Revenue, Washington, D. C., [illegible] Gas Valuation Section.

[illegible] Paul is a new member of the directorate of the [illegible] Natural Gas Company, Little Rock, Ark.

ELECTED

[illegible] OMA [illegible] Officers of the Oklahoma [illegible] Gas Company recently elected are as follows: [illegible] President; J. V. Ritts [illegible] Sharp, Vice Presidents; [illegible] Secretary and Treasurer; R. S. Callen [illegible] Assistant Secretary and Treasurer.

Tulsa. Officers have been elected by the directorate of the Charles F. Noble Oil & Gas Company as follows: President, J. B. Preston; First Vice President, and Treasurer, Charles S. Avery; Second Vice President, A. H. Carter; Secretary, Mack Ryan; Assistant Secretary Treasurer, R. B. Martin.

INCORPORATED

COLORADO. *Denver.* The Mutual Shale Oil Company has been incorporated with a capital of $1,000,000. Among the incorporators are J. W. Cook, and A. C. Seitz.

Pueblo. The Citizen Wave Oil & Gas Company is a new corporation having offices in this city. Among those interested are F. J. Prosser, A. J. Platt and C. J. Lantis. The concern has a capitalization of $250,000.

MISSOURI. *Joplin.* The Empire Natural Gas Company incorporated under the laws of the state of Delaware, with a capital stock of $12,000,000, has been incorporated in Missouri with a capital of $150,000, the shareholders being the Bankers Trust Company of New York City, M. R. Bump, Montclair, N. J.; J. D. Crew, in Brooklyn, N. Y.; F. J. Blackburn, Westfield, N. J., and others.

OKLAHOMA. *Okemah.* The Okemah Gas Company has been incorporated with a capital stock of $75,000. Among those interested in the new project are R. H. Williams, J. J. Davis and J. B. Buckles of Holdenville.

WEST VIRGINIA. *Salem.* The Randolph Oil & Gas Company, $50,000, has been incorporated by Ernest Randolph, Jennings Randolph, Lee A. Davis, John R. Dennison, Owen F. Morrison, Lincoln D. Lowther, Salem; Richard D. Mace, Clarksburg.

Suffolk. A recently formed organization is the Star Basin Oil & Gas Company. The following are the officers of the new concern: Rose E. Stout, of Clarksburg, President; Judge Isaac Lowther, Vice President; Carl Davis, of Clarksburg, Secretary and Treasurer.

PER CUBIC FOOT—RATES

KANSAS. *Kansas City.* The Wyandotte County Gas Company is asking permission to increase its rates [illegible] cents per thousand in this city.

Make this: A life while making a living. Live one day at a time.

NEW YORK—*Alden*—The Republic Light, Heat & Power Company has increased its rate 40 cents per thousand, and is now charging 75 cents per thousand less a discount of 5 cents per thousand. A minimum charge of $1.00 per month has been established.

Batavia—The Republic Light, Heat & Power Company has established a new rate of 75 cents per thousand for fuel, light and power purposes, less a discount of 5 cents per thousand. A minimum charge of $1.00 per month is also in force. The company operates in this city, and as well in Akron, Alexander, Attica, Corfu, Alden, Batavia, Bethany, Clarence, Covington, Darien, Elma, Lancaster, Marilla, Middlebury, Newstead, Pavillion, Pembroke and Stafford, N. Y.

OKLAHOMA—*Ramona*—The Oklahoma Gas Company has made effective the following schedule of rates: First 1,000 ft. the rate is to be $2; next 149,000 ft., 55 cents; next 350,000 ft., 40 cents, and 25 cents for all over 500,000 ft.

PENNSYLVANIA—*Colona*—The Crescent Gas & Oil Company has increased its rate from 45 to 50 cents per thousand in this city, as well as in Monaca, Monaca Heights, Wireton, Glenwillard, and Sheffield.

GENERAL

ARKANSAS—*Alma*—A franchise has been granted S. H. Hale under which he will be permitted to operate a plant and distributing system in this city.

FLORIDA—*Oldsmar*—According to report tests are being drilled in a section a mile distant from this town. It is claimed that the rock formation has been verified by the state geologist, and that indications for oil and gas production are favorable.

ILLINOIS—*Marion*—The Marion Gas Company recently gave a dinner to 100 citizens for the purpose of demonstrating how natural gas may be used efficiently and economically. The items on the menu which required heat in preparation were: twenty apple pies; 2½ gal. of oysters, escalloped; 50 lb. of lamb, three pecks of potatoes, salad dressing, brown gravy, coffee, fifteen cans of peas, creamed. When the cooking operations were completed the meter registered 240 cubic feet, costing about 11 cents.

KENTUCKY—*Covington*—The Union Light, Heat & Power Company has been assessed at $3,250,000 for the current year.

Taylor County—The Tampico Gas Company, it is reported, has completed a 3,500,000-foot gasser on the Latimore farm, near Campbellsville, at a depth of 400 feet.

LOUISIANA—*De Soto Parish*—The De Soto Oil & Gas Company is drilling in section 12-11-16, three miles east of Logansport.

NEW YORK—*Canisteo*—A good gas well was recently completed on the farm of R. Dennis near this village. The gas was found at a depth of 525 feet.

Dunkirk—The Republic Light, Heat & Power Company, is reported to have leased large acreage in the Abbey-Forestville field, in which lately several producing gas wells have been completed.

New York City—Empire Gas & Fuel Company, subsidiary of the Cities Service Company is offering through Halsey, Stuart & Company, Hallgarten & Company, Goldman Sachs & Company, and Lehman Bros., $40,000,000 fifteen-year 7½ per cent. refunding mortgage convertible bonds.

OHIO—*Ferguson*—The Westova Oil & Gas Company is drilling on its lease located near this town. The company already is operating several small wells in this section.

Muskingum—In section 1, Harrison township, the J. L. Swingle Oil & Gas Company has a light gasser in the Berea grit at a test on the C. E. Albright farm. In section 2 in the same township, the same company's second test on the O. W. Harrop farm is a fair gasser.

Washington County—In Lawrence township the National Oil & Gas Company has completed a test on the Thomas McGregor farm. It is a gasser in the Keener sand at a depth of 1,270 feet.

Bartlesville—The Kansas Natural Gas Company has moved its general offices to this city, having formerly been located in Independence, Kan.

Bristow—The Transcontinental Oil Company has completed a gasser estimated to have a production of 25,000,000 cubic feet in its test in section 23-16-9, Bristow district.

Enid—The Enid Division of Oklahoma Gas & Electric Company is co-operating with the Lions' Club in its campaign to make Enid "The City Beautiful." The slogan, "Every Lot a Garden Spot", is being carried out by planting flowers and shrubs wherever possible around the company's properties.

Kay County—The Cosden Oil & Gas Company has disposed of one-half the interest in its gas rights to the Blackwell Oil & Gas Company in section 13-26-1. The sale does not include casinghead rights.

Mangum—Negotiations are being conducted here by the Chamber of Commerce which if successful will result in bringing natural gas to this city from wells in the northeastern section of Green County.

McIntosh County—Wigton & Handler have completed a 5,000,000-foot gasser in No. 6 on the Jackson lease in section 9-12-14. This company also has a 2,000,000-foot gasser in No. 5, the same section.

Get used to this: Turning up with a smile—and smiling even when you are turned down.

County The Southwestern Petroleum Com has a large gasser in section 10-24-1w, Tonkawa t This is the company's No. 3 test on the Murray The gas was found in the second sand from to 2,125 feet

ounds The Hoklenville Gas Company has started ruction work on the pipe line from the Yeager which will bring the gas supply to this city A hise was obtained recently by the company to oper distributing system in this city

ounty The Kewanee Oil Company in No the Harrison lease, section 18-15-14, Bald Hill dis is reported a gasser with a yield of 1,000,000 cubic 1747 to 1762 feet

City The construction of a gas pipe line ex g from the Bliss-Tonkawa field to this city, a dis t eighteen miles, is under consideration by the Kan s Gas Company of this city

County R H Smith and associates have leted a good gasser in their test on the Lewis Clark on section 23-7-7

County No 6 of the Graham Production any on the Ridge farm, section 30-1n-8w, at a depth 80 feet is a good gasser

ion The Mid Continent Oil & Gas Association has invited to the local Chamber of Commerce to share w building The new structure as planned will cost neighborhood of $150,000

County A good gasser has been completed Joe A Henderson of Tulsa, in section 34-17-18 gas came in at 28 feet in the sand

Allegheny County In the Dud Robinson Brothers have completed a test on Sackles farm It is a small gasser in the Berea In the same district Beeler and McEvon's test on Barhart farm and Neels and Company's test on the farm are both gassers

the Unity district the Allegheny Valley Oil & Gas any has a gasser in the 100-foot sand at a second on the A G Hocklberg farm

ford In its test on the Conner farm on Armenia the Bradford County Oil & Coal Corporation fair gas production The company has large e in this section under lease which will be thor s tested

County One half mile south of Sycamore, ge township the Manufacturers Light & Heat has drilled a test on the Dora Garner farm Pittsburgh coal delivering gas at that level

M township the Carnegie Natural Gas Com has a gasser in the salt sand at a second test on the Conklin farm

ated in Center township, the Federal Oil Com a test on the Sanders Bros farm is a gasser in the sand

The Marshall Oil & Gas Company's second test on the M S Hostutler farm in Springhill township, has been completed in the Big Injun sand and from a casinghead test shows a daily capacity of more than 8,000,000 cubic feet

In Wayne township, the Philadelphia Oil Company has a gasser in the Bayard sand at a test on the J H Knight farm

In Center township, the Manufacturers Light & Heat Company has a Gordon sand gasser at a test on the M L Morris farm

Pittsburgh Division chiefs recently appointed to the Engineering Department of the Philadelphia Company by Ralph Ramsford Chief Engineer, are W C Bond, assistant engineer, street railway division P A Young assistant engineer, mechanical division, M R Scharff, assistant engineer, valuation division, H L Fullerton assistant engineer, electrical division, F N Coombes assistant engineer, underground division, N O Smith-Peterson, assistant engineer, drafting division, Fred I East, assistant to chief engineer

Washington County In South Franklin township the Carnegie Natural Gas Company has completed a test on the S A Dague farm, getting a fair gasser in the Nineveh sand

The No 4 well on the A C Bungard farm in Canton township, two and one half miles northwest of Washington, drilled by the Hughes & Day Oil Company of Dormont, is estimated to be producing 2,000,000 cubic feet per day with a rock pressure of 360 pounds

In Canton township Hughes & Day have completed a second test on the A C Bungard farm located 2,500 feet southeast of No 1 is a gasser in the salt sand

Located one-half mile northwest of the Hall farm pumping station, Wallace Brothers have drilled a test on their own farm through the fifth sand It is a fair gasser in this formation

Hughes & Day have a light gasser in the fourth and fifth sands at a test on the Dr George Kells farm

Waynesburg The Herrial Run Oil & Gas Company has a 1,500,000 foot gasser on the A J Doe farm in Springhill township The gas was developed on the Big Injun sand The Peoples Natural Gas Company has contracted for the output of the well

TEXAS *Cameron County* N 1 Seth and associates on the Burnett property in producing around 10,000,000 cubic feet in the line The gas comes from a depth of 3,000 feet

The Humble Oil & Refining Company has a 25,000,000-foot gasser in No 2 on the Burnett lease

Dallas The Dallas Gas Company, it is reported, will be considerable extended during the current year It is said $125,000 will be expended on new mains

Adopt this: Think before you act—but don't think too long

Palo Pinto County—Harris and associates have completed their No. 1 test on the Aller Company tract which after being shot is yielding 4,000,000 cubic feet of dry gas at a depth of 3490 feet.

Three Rivers—The Three Rivers Glass Company, it is reported, has contracted with the Three Rivers Production Company for 9,000,000 cubic feet of gas per month. The price agreed upon is 10 cents per thousand.

WEST VIRGINIA—*Calhoun County*—In Sheridan district, Martin Crawley has completed a test on the Camden-Sommers farm; it is a light gasser in the Big Injun sand.

On Anna Maria Creek, Sheridan district, Thomas Crowley has drilled his second test on the Samuel Commers farm through the Big Injun sand and showing for a 500,000-foot gasser.

Charleston—The Diamond Oil & Gas Company has been incorporated in this city with a capital stock of $50,000. Among those interested in the new project are: L. B. Whitehurst, F. M. Driggs, I. O. Willard, G. C. Irvins, J. E. Springston, Charleston.

The United Fuel Gas Company has been assessed at $2,460,000—consisting of $678,302 tangible property and $1,781,698 franchise. This is a decrease from the assessment of the previous year.

Doddridge County—On Broad Run, in McClelland district, the Hope Natural Gas Company's No. 1 on the Roy McCoy farm has been completed in the Gordon and is a gasser in that formation.

Gilmer County—The Gilmer Center Oil & Gas Company has a gasser in its No. 1 test on the Henderson farm in Center district.

Gilmer County—On Rock Camp run of Tanners Creek, DeKalb district, Rinehart & Company have now completed in the Big Injun sand a test on the D. M. Miller farm. It is a 1,000,000-foot gasser in the Blue Monday sand.

In DeKalb district the McCall Oil Company's test on the D. M. Miller heirs' farm is a gasser in the Big Injun sand.

Harrison County—In Simpson district the Gray-Davis Oil & Gas Company has a Big Injun gasser at a test on the Effie Brown farm.

In Coal district the Light & Heat Company has a fifth sand gasser at a test on the S. A. Nixon farm.

Huron County—The Puritan Oil & Gas Company in Ripley township, near Norwalk, reports a good gasser on the Hoose farm.

Kanawha County—The William Bowers No. 24 well on Witchers Creek was completed by the Kanawha Valley Producing Company and is producing 700,000 cubic feet of gas.

In Big Sandy district, the United Fuel Gas Company has a gasser in the salt sand at a test on the Estaline Campbell farm.

Lewis County—In Courthouse district the Hope Natural Gas Company has gone back to an old gasser on the William McCudden farm and drilled it to the fifth sand, getting a light oil producer in the lower formation.

Lincoln County—In Carroll district the Laurel Development Company has a small gasser at a test on the W. T. Black Sons farm.

In Carroll district the Cambridge Carbon Company got a 3,000,000-foot gas well in the salt sand at a test on the Thomas Ray farm.

Marion County—In Paw Paw district the Owens Bottle & Machine Company developed a good gas pressure in the Big Injun sand at its test on the Charles C. Floyd farm.

Marshall County—In Liberty district the Marshall-Preston Oil & Gas Company has a Gordon sand gasser at a test on the Susanna Kerns farm.

Ritchie County—In Murphy district, about one and one-half miles west of McFarlan Station, on the waters of Laurel Run, the Hope Natural Gas Company has a 500,000-foot gasser in the salt sand at their test on the C. E. Carnes farm.

Roane County—The Sarah F. Taylor No. 4 well on left Hand creek has been completed by the Columbian Carbon Company at a depth of 1,692 feet and is producing 1,800,000 cubic feet of gas.

Wood County—In Williams district the Hudson Oil Company's test on the Pugh heirs' farm is a gasser.

WYOMING—*Greybull*—The Wyoming Gas Company is carrying its gas line across the Big Horn River and also across the Greybull River, ten-inch and fourteen-inch lines being employed. The line conveys gas into the Greybull refinery.

VERA CRUZ—*San Cristobal*—In a drilling near this city the original purpose of which was the finding of oil, a good flow of gas was uncovered at a depth of 1785 feet.

POPULARIZING BY ADVERTISING

NOT infrequently is it the case that we run across some manufacturer or dealer who has the idea that advertising is overrated as a means of concentrating the attention of buyers sufficiently to warrant the expenditure.

The National Trade Association instituted a campaign for the purpose of arriving at facts pertaining to this very subject. Questionaires were sent out and the results showed as follows:

Question 1. When you go into a store and find two articles of a similar nature for sale at the same price, one of which is a nationally advertised article, which do you purchase?

Practice this: Holding your tongue between your teeth so it won't cut your throat.

Y

GASOLINE ENGINE

JULY 1922

21,823 H. P. OF COOPER ENGINES
FOR ONE COMPANY

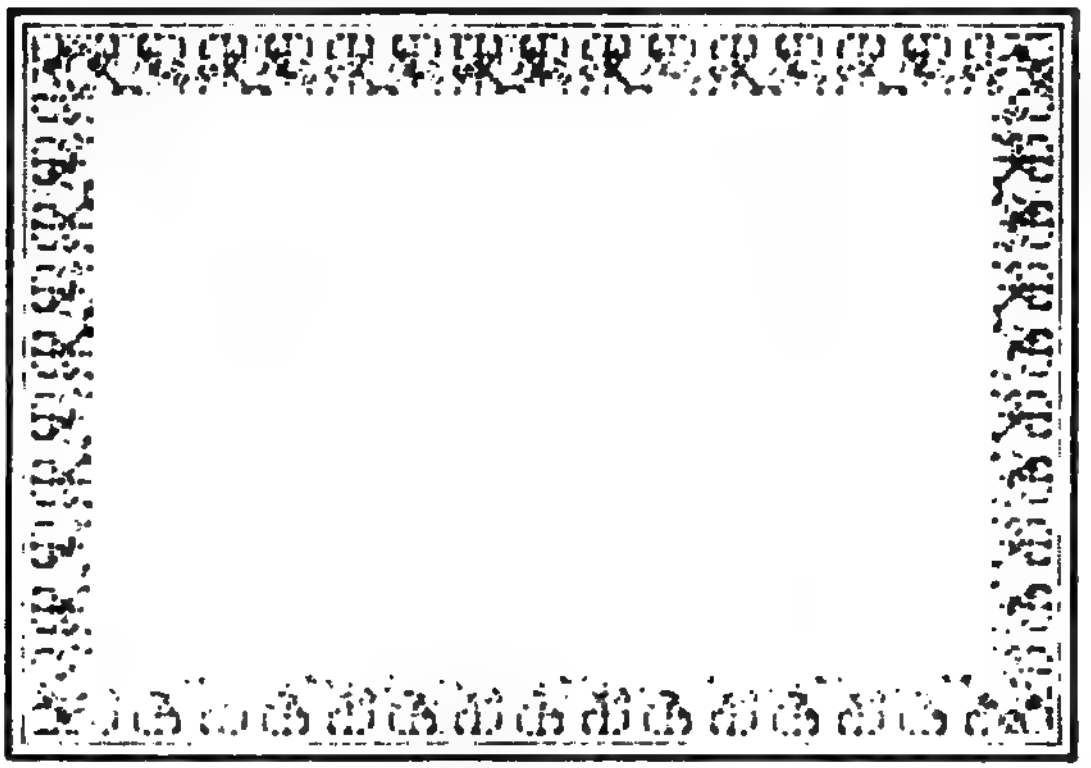

PUBLISHED BY THE PERIODICALS PUBLISHING COMPANY

CONTENTS FOR JULY, 1922

MEMBERS OF ASSOCIATION OF NATURAL GAS SUPPLY MEN

ASSOCIATION OFFICES

905 Oliver Building, Pittsburgh, Pa

DIRECTORS

FRED A. MILLER	F. R. HUTCHINSON
T. C. CLIFFORD	A. W. THOMPSON
L. A. ADAMS	WM. PATTERSON
O. F. FELIX	R. A. McKINNEY
W. B. GLOVER	F. W. MINER
WM. B. WAY	L. P. SUTTER
E. S. ROONEY	GEO. D. ROPER
WM. McKEE	HUGH TRIMBLE

Acme Fishing Tool Company, Parkersburg, West Va.
Ajax Iron Works, Corry, Pa.
American Atmos Corporation, Pittsburgh.
American Foundry Construction Co., Pittsburgh, Pa.
American Heater Corp., St. Louis.
Anchor Packing Co., Pittsburgh.

Bailey Meter Co., Cleveland.
Baltimore Gas Appliance & Mfg. Co., Baltimore.
Bastian-Morley Co., La Porte, Ind.
Bartlesville Supply Co., Bartlesville, Okla.
Becker Co., Newark, O.
Bessemer Gas Engine Co., Grove, City, Pa.
Black, Sivals & Bryson, Bartlesville, Okla.
Black Steel & Wire Co.
Borden Company, Warren, Ohio.
Bovaird & Seyfang Mfg. Co., Bradford, Pa.
Brandon, Arthur H. Co., Toledo.
Bradford Motor Works, Bradford, Pa.
Bridgeport Mch. Co., Augusta, Kan.
Bristol Co., Waterbury, Conn.
Broderick & Bascom Rope Co., St. Louis.
Bryant Heater & Mfg. Co., Cleveland.
Builders Iron Fdy., Providence.
Byers, A. M. Co., Pittsburgh.

V.Va.

aukee

Dayton Pipe Coupling Co., Dayton.
Davison, N. C., Gas Burner & Weld'g Co., Pittsburgh.
Deck Tank Co., Okmulgee, Okla.
Doherty & Co., Henry L., New York.
Dresser, S. R., Mfg. Co., Bradford, Pa.
Duquesne Burner Service Co., Pittsburgh.

Economy Stove Co., Cleveland, O.
Economy Burner & Engineering Co., Pittsburgh
Equitable Meter Co., Pittsburgh.
Estate Stove Co., Hamilton, O.

Fenwick-Reddaway Mfg. Co., Newark, N. J
Fitler, Edwin H. Co., Philadelphia, Pa.
Foxboro Co., The, Foxboro, Mass.

Frick & Lindsay Co., Pittsburgh.

Garlock Packing Co., Palmyra, N. Y.
Gas Appliance Co., Cleveland.
Gas Engineering & Const. Co., Pittsburgh.
General Gas Light Co., Kalamazoo.
Germer Stove Co., Erie.
Gilfillan Machine Works, Ebenezer, N. Y.
Goodrich, B. F. Co., Akron, O.
J. H. Grayson Mfg. Co., Athens, Ohio.
Grinnell Co., Providence, R. I.
Guiberson Corporation, Dallas, Tex.

Hammon Coupler Co., Pittsburgh.
Hays Mfg. Co., Erie.
Hart Mfg. Co., Cleveland.
Hazard Mfg. Co., Chicago.
Heeter, C. M. Sons & Co., Inc., Butler, Pa.
Hewitt Rubber Co., Pittsburgh.
Hoffman Heater Co., Lorain, O.
Hope Engineering & Supply Co., Pittsburgh.
James Howden Co. of America, Wellsville, N. Y.
Humphrey Company, Kalamazoo, Mich.

Imperial Belting Co., Chicago, Ill.
Ingersoll-Rand Co., Pittsburgh.
International Derrick & Equipment Co., Columbus.

Jarecki Mfg. Co., Erie.
Jones & Laughlin Steel Co., Pittsburg, Pa.
S. M. Jones Co., Toledo.

Kisselman & Co., Parkersburg, West Va.
Kootz & Stroehman, Parkersburg, W. Va.
Koppers Co., Pittsburgh, Pa.

Larco Wrench & Mfg. Co., Chicago.
Lattimer-Stevens Co., Columbus, O.
Leschen, A. & Sons Rope Co., St. Louis.
Lucey Mfg. Corp., Pittsburgh.
Ludlow Valve Mfg. Co., Pittsburgh.
Lunkenheimer Company, Cincinnati, Ohio.

MacWhyte Co., Pittsburgh.
Manhattan Rubber Mfg. Co., Passaic, N. J.
McKain, J. B., Fishing Tool Co., Parkersburg, W. Va.
Metric Metal Works, Erie.
Minneapolis Heat Reg. Co., Minneapolis.
Moon Mfg. Co., The, Chicago.
Moore, Lee C. & Co., Inc., Pittsburgh.
Moser Mfg. Co., Kane, Pa.
Mueller H. Mfg. Co., Decatur, Ill.

National Supply Co., Pittsburgh.
National Transit Pump & Mach. Co., Oil City, Pa.
National Tube Co., Pittsburgh.
Natural Gas Industry, Buffalo.
New Bedford Cordage Co., New York City.
New York Belt'g & Pack'g Co., New York.
"1900" Washer Co., Binghamton, N. Y.
Northrup Equipment Co., Parkersburg, West Va.

Ohio State Stove Co., Columbus, O.
Oil & Gas Journal, Tulsa, Okla.
Oil City Boiler Wks., Oil City, Pa.
Oil Trade Journal, New York.

Oil Well Supply Co., Pittsburgh.
Oxweld Acetylene Co., Chicago.

Parkersburg Mach. Co., Parkersburg, W.Va.
Parkersburg Rig & Reel Co., Parkersburg, W. Va.
Peerless Heater Co., Pittsburgh.
Pennsylvania Furnace & Stove Co., Warren, Pa.
Petroleum Publishing Co., Tulsa, Okla.
Petroleum Supply Co., Steubenville, O.
Pittsburgh Meter Co., East Pittsburgh.
Pittsburgh Reinforced Brazing & Mach. Co., Pittsburgh.
Pittsburgh Supply Co., Pittsburgh.
Pittsburgh Valve & Fittings Co., Pittsburgh.
Pittsburgh Valve, F'd'y & Const. Co., Pittsburgh.
Pittsburgh Water Heater Co., Pittsburgh, Pa.
Plymouth Cordage Co., N. Plymouth, Mass.
Pratt & Cady Co., Inc., Hartford, Conn.
Precision Instrument Co., Newark, N. J.
Prichard Supply Co., Mannington, W. Va.

O

J.

Co.,

Tex.

Taylor, W. P. Co., Buffalo.
Toledo Pipe Thr'd'g Mach. Co., Toledo, O.

Union Rubber & Asbestos Co., Trenton, N. J
United Seal Co., Columbus.
Upson-Walton Co., Cleveland, O.
U. S. Rubber Co., New York.

Walker & Pratt Mfg. Co., Boston, Mass.
Welsbach Co., Gloucester City, N. J.
Westcott Valve Co., Seneca Falls, N. Y.
Westinghouse Elec. & Mfg. Co., Pittsburgh.
Wheeling Steel Products Co., Wheeling, W. Va.
Williams Tool Co., Erie.
Witman & Co., Columbus.
Williamsport Wire Rope Co., Williamsport, Pa.
Worthington Pump & Mach. Corp., Buffalo.

Yorke Derrick Co., Washington, Pa.
Youngstown Sheet & Tube Co., Youngstown, O.
Young, Wm. T. Drilling Eng. Co., Oil City.

FROM THE EDITORIAL MAIL BAG

MAMMOTH BUILDING GAS HEATED

IN Los Angeles, Cal., one of the finest new buildings is known as the Brownstein-Louis Building which is situated at the corner of Eighth and Figueroa streets. This building presents a difficult heating problem, even though located in the Los Angeles climate, owing to the fact that approximately four fifths of the building has glass exposure. However, notwithstanding this feature, and that there are in the building 210,150 square feet of floor area and nearly three million cubic feet of area to be heated, a gas-fired steam heating system has been adopted, the plant comprising two hundred and twenty sections of cast iron low-pressure gas-fired heating equipment. "Peerless" steam boilers were selected in units of forty four sections, each unit being set upon a concrete foundation some eighteen inches high, the pipe joints all welded, save the header connections.

No screw fittings other than flange unions were used throughout the entire equipment of steam piping. On the contrary, acetylene welding was the system adopted, two hundred and sixty welded joints being the outcome.

This is a very simple plant to operate, it being necessary but to start the electric fan, turn on and light the gas, the equipment is automatic in operation. The following is a description in detail of the plant as installed:

Four stacks cast iron radiation, 3,200 square feet; weight, 27,000 pounds.

Maximum fuel consumption, 8,800 cubic feet per hour, 750 B. t. u. gas.

Maximum steam pressure by gauge, five pounds.

Multiblade type of blower with a rated capacity of 122,000 cubic feet per minute.

Electric motor for driving blower, 40 horsepower, direct current.

Electric motor for driving pump, three horsepower, direct current.

Maximum vacuum at pump, five inches.

Vacuum pump, 8x8 reciprocating.

The following further description we gratefully acknowledge from the hand of Mr. I. J. Protheroe, General Agent of the Southern California Gas Company of Los Angeles:

"Steam is generated in the boilers and passes directly to the radiation or vento coils and is returned to the boilers when condensed by means of a vacuum pump.

Fresh, washed air is driven by the fan directly through the vento coils and plenum chamber and is conveyed by ducts throughout the entire building.

This gas fired heating plant is unique in that it is automatic in operation both as to steam control and temperature control. Thermometers are located on each of the five floors of the building and when anyone registers 71 degrees Fahrenheit, compressed air is released in a line leading to a damper in an air duct, causing the damper to gradually lessen the flow of heated air and proportionately increase the flow of cold air, thus maintaining an even temperature on each floor. Coincident with this a thermostatic air controlled steam valve closes and cuts off the steam supply to a section of the vento coils; this in turn causes a gas steam valve of the usual type to cut off the supply of gas to one or more boilers, as each vento coil is cut off, one boiler is also automatically cut off.

There is a gas burner under each section and each burner is adjusted to consume 40 cubic feet of gas per hour.

The greatest or maximum consumption of gas in this plant is, therefore, 220x40 = 8,800 cubic feet of gas per hour.

Gas is supplied to these five boilers from the gas company's city system of mixed gas of a heating value of 750 B. t. u.'s per cubic foot. The rate charged is the regular domestic rate or A-1 schedule, a block rate from 76 cents to 61 cents per thousand cubic feet.

The plant was put in service the first of January of this year and its success is well indicated by the following letter received by the Southern California Company from the Brownstein-Louis Company:

Southern California Gas Company,
Los Angeles.

Gentlemen:

Today we sent you a formal letter of acceptance of our Gas Fired Steam Heating System in our new building, at Eighth and Figueroa streets. But we feel that we want to go a little further in expressing our appreciation of the system itself and the manner in which you handled this entire proposition.

You have made a very handsome installation and its operation to date is more than satisfactory. You had a most unusual problem on account of the large area to be heated and the excessive exposure of glass windows.

We will heartily recommend your systems to any prospective builder who may enquire and want us to know that it will be a pleasure for us to have you bring any of your establishment who may be interested in seeing this equipment.

During the past two years states Mr. Protheroe the Southern California Gas Company has installed similar plants of the same type for the following institutions:

Remember that the misfortunes hardest to bear are those which never come—Lowell

ge it carried to the extreme that can not be many distant. Serious as the present situation is, however, there are fundamental problems more insistent future than even the pending differences between er and employer. These basal problems affect nole coal industry to some degree, but especially unionized branch. Clear up the economics of the is and a lasting settlement of labor controversy becomes a possibility. Leave these questions unsolved and industrial peace can not be expected to the usual two-year armistice.

t coal producers and coal consumers alike need ems of the business rather than compromise between parties to the controversy, and in this reform it solutely essential that the mine workers should rate with the mine operator. How long have the owners treated the coal business as private property, and how long have the labor leaders with no less selfish attitude obstructed every move for under efficiency and economy. The people's coal costs much because of the mistaken idea that mine owner mine worker can continue to fight over contracts ries. Cheaper coal and larger earnings will come engineering is emphasized more and bargaining

ernia of engineering, the coal industry has a bad active translated into human relations poorly ering mines mean poorly employed miners. A working year would seem at first glance, desirable mine owner, mine worker, and consumer alike not get it.

trouble with our soft coal mines is not so much year as the broken month, the broken week the broken day. The running time is broken small pieces, for mine operation is not simply sea it is intermittent. In that theoretical mine of the average mine of the country, we find more a larger month than June by 25 per cent larger than April by 10 per cent and yet the in a normal November is only 10 to 21 Add irregularity creeps into the working week working day, for Fridays and Saturdays are days than Mondays. Granted that the other industries suffer the handicap of seasonal employment our problem and the national problem is the betterment of the working time of and especially bituminous coal mines.

longer working year for a reduced labor is the method of bringing about the lower wage larger annual earnings both of which needed. It is largely by reason of the rate of wages that coal costs too much, and economic grounds it may well be questioned producer should be paid a wage out of all with the wage of the consumer. Can a $5 man afford to buy coal mined by a $10 a day worker?

general welfare is tied up with a regular supply coal and larger earnings for those who it. And the responsibility for mending the broken year needs to be shared by the many who help thus to bring about the economic and social benefits from coal that the Nation's industry can afford to buy, and from mining towns of which the Nation need not be ashamed.

GEMS FROM RODERICK

WHY did the *Atlantic Monthly* usually free from the irresponsibles call [illegible] asked an Oklahoma oil man a college graduate who counts his wells by the flock.

"Fall for what?" another queried.

"That stuff written by Roderick Peattie who says he a geologist entitled 'Hunting the Oil' in Oklahoma the most absurd far fetched story ever imposed upon the public through a reputable publication.

And that's the way Oklahoma oil folk talk about Roddie's literary effort.

Here are some gems from it: "• • • Now they have retired to expensive homes • • • where they may sit on the front porch collarless in their stocking feet, while their wives have changed long ago and rolled to town behind six cylinders to buy whatever lies their fancy. • • • Absurd! For J. King president of the Kingwood Company not only wears shoes but frequently boots during cold spells. Recently Dr. J. J. Deaner of Deaner Pool fame was seen in Kansas City wearing shoes. J. B. Jameson his partner who lives up in the home neighborhood of the *Atlantic Monthly* well it looks peculiar for J. B. to leave his off him. J. J. Mahoney president North Baltimore Company wore shoes long before he brought in his first oil well presumably after he quit the newspaper business and still is fond of them with [illegible]. While James G. Lyons president Lyons Petroleum Company was late getting the shoe habit he nevertheless is a stickler for them now. And Dr. W. C. Vernon always wears them when he can get them large enough. W. B. Pine of the Pine Interests invariably wears shoes when the ground is either [illegible]. • • • It is a wonderful economic and it is not unusual for a man to drive in [illegible] on the road for a bath. • • • [illegible] Harvard man who may have always worked in a New England dress goods until he retired to sit at the Parthenon. Here at Okmulgee and other [illegible] the bath proved [illegible]

[illegible] • • • [illegible] lighting a small carbon [illegible] the rule of the bank. • • • A regular Vergennes [illegible] affair. Suppose [illegible] Water lighting. Would Roddie [illegible] the Carnal Corporation [illegible]

Another sparkler: • • • [illegible] town I was able to hear the church choir practicing. • • • It was like a Neostamized savage breaking

into a voodoo chant. Probably 'twas M. C. French and E. H. Poe, secretary, Wooster Oil Company, rejoicing over their new 1,000-barrel wells.

Another good one: "* * * The negro is never a drifter. * * * The negro is pre-eminently social * * *." Did meet some companionable people, didn't he?

But here's the crown jewel of the collection: "* * * Once the decision is made to drill, a rig gang can erect a 72-foot derrick in a few hours. A huge bit is then dropped from the top of the derrick. Like an arrow it sticks in the ground and the well is 'spudded in' * * *."

My Gawd, what's the Democratic party coming to in Oklahoma?—*The Oil Weekly.*

WHICH DO YOU LACK?

IN seeking data from employing concerns, Detroit clubs asked, what in particular is sought in an employee's make-up, when under consideration? Over a hundred concerns replied, and here is the boiled-down list.

Knowledge—appearance—personality.

Sincerity—courtesy—conciseness—enthusiasm.

Study this list. Which do you lack? Study yourself and find out! Cultivate what you lack. Don't fool or pamper yourself in the belief that you have them all. Perhaps you have but two or three; if so, you are far below par.

AN OLD GAS BILL

THROUGH the courtesy of Mr. Alfred Fowler, Superintendent of the Salem Gas Light Company of Salem, N. J., we are in receipt of an old bill dated 1875. The rate of gas was then $5.00 per thousand cubic feet, with a discount of 20 per cent for "prompt payment." At the bottom of the bill is the announcement that the office hours are 10:00 a. m. to 3:00 p. m., furthermore, that the gas will be "stopped from the premises" if the bill is not paid in ten days.

There are people who think that the gas company of today is arbitrary; but how about a rule to turn off the gas in ten days from presentation of bill unless the charge is paid? It was, indeed, an arbitrary attitude to say that unless paid within the ten-day limit, the customer would lose both the 20 per cent discount and the privilege of having gas in his premises.

LOW-PRESSURE GAS BURNERS IN OIL-FIELD BOILERS

BY M. P. YOUKER AND G. S. BREWER

A Report on the "Use of Low-Pressure Gas Burners in Oil-Field Boilers" has been completed by M. P. Youker and G. S. Brewer, of the Bartlesville Station. The report gives complete results of tests made with eleven low-pressure gas burners in an experimental boiler. The investigation has shown that low-pressure gas, vast quantities of which are now being wasted, can be successfully used to generate steam for drilling purposes. Results of the work show that the multiple Bunsen type of burner is the most satisfactory type tested. For any given gas pressure the capacity of a gas burner will depend upon the number and size of the gas jets used. The report is being prepared for printing by the Mid-Continent Oil and Gas Association, of Tulsa, in its Year Book. —A. G. A. Abstracts.

Luck means the constant and complete use of your own resources . .

Matters of Franchise

"Indeterminate Franchise"— Indefeasible Street-Rights

By F. W. DANA
[illegible] Kansas City, Kansas — Kansas City, Mo.

epithet "indeterminate" franchise is a most unhappy coinage to convey the idea we are considering. The word "indeterminate" has no well defined technical or legal meaning. An indeterminate equation in algebra is one having so many unknown quantities that it cannot be solved. An indeterminate residence is a nomadic abode. An indeterminate sentence in criminal law is one in which the judgment of the court fixes the minimum and the statute fixes the maximum period of confinement. The word is not found in law dictionaries or encyclopedias. Until the Wisconsin legislature coined the term, it was regarded altogether too uncertain to use in legal parlance. It meant not settled, not determined. The greatest part of the questions and [illegible] that people mankind depend upon the [illegible] uncertain use of words of which is the [illegible] idea which these are made to [illegible]

[illegible] of the Indiana Commission, says that it [illegible] granting a place to conduct a business.[1]

[illegible] Court of Wisconsin defines it as a per[illegible] subject to the conditions and limita[illegible] statute in which it is used.[2] It is obvious [illegible] "indeterminate" has no particular mean[illegible] connection with the statute in which it is [illegible] more likely to conceal than reveal the thought in mind, if there be any. This unfortunate term has doubtless been largely responsible for the sloth with which public utilities, as well as the public and the legislatures, have accepted the proposition.

The word "franchise" is also an unfortunate term. There are all kinds, makes, brands, styles, fashions and forms of franchises. There is the franchise to be a corporation and carry on certain lines of business, known as the primary franchise derived directly from the State. Then there are numerous grants both to corporations and individuals directly from the state or indirectly through the subordinate agencies of the State. These are classed as secondary franchises. Then there are a great number of individual and personal rights such as the franchise of suffrage, the franchise of free speech, and many others. But all are presumed to be derived directly or indirectly from the sovereign.

In the popular mind the word "franchise" carries an *indeterminate* idea, vague, meaningless, intangible and inarticulate, but always presumed to be of very great value and carrying special privileges, powers and immunities to the grantee. Therefore it must be taxed heavily and great and valuable consideration must be demanded for it and its use must be carefully restricted, limited and regulated to prevent abuses. Now all this is imagination, pure hobgoblins and results in crippling essential industries, impairing the service to the public and reflecting higher rates than necessary.

Now the right to be a corporation and carrying on a public service business is derived directly from the State.[3] The municipalities and subordinate agencies of the State have no power, jurisdiction or authority to confer or deny, enlarge or diminish that or any other [illegible] right.[4] The right of the public [illegible] corporations of this and other states [illegible] through to the people generally public utility service is a primary franchise right coming directly from the State to the corporation [illegible] carrying on the State's business of furnishing public utility service. This right [illegible] legal or proper service derived from the municipalities of the State. The State is the real party in interest, the primary moving party interested in and responsible for the development and growth of its public utility industries and the maintenance and continuance of its public utility service as well as the reasonableness of the rates charged. Now many

[illegible]

[1] [illegible]
[2] [illegible]
[3] [illegible]
[4] [illegible]

Learn this: Something new and useful every day.

in contemplation of law this whole public utility business is a sovereign state function and the furnishing and maintenance of public utility service is a duty incumbent upon the State which it owes to the citizens at large of the entire State, not merely those who happen to be permanent or temporary inhabitants or voters of the city where the utility is doing business. It is a "public use" in the constitutional sense. It is only upon this theory and ground that the State, either directly or through its municipalities or administrative commissions may condemn and take, either by the exercise of the power of eminent domain or the police power of rate-regulation, the property of a public utility or the *use* thereof. Condemnation is the taking of the corpus of private property for *public* use. Rate regulation is the taking of the *"use"* of private property for *public* use. In either case, the Federal Constitution requires "due process of law." Due process of law means and includes the application of evidence for the determination of value which must measure that "just compensation" to be given for the property or the "use" thereof taken for *public* use. But it is only for a *public* use that private property can be taken by the state at all. Therefore, it is exclusively the business of the State, delegated to private enterprise generally under the wise and stimulating public policy of the American Commonwealths and Nation. It thus appears that the right or franchise to carry on the business of a public utility comes direct from the State itself.

The right to use the public ways of the State and its municipalities in the carrying on of a public utility business may be a part of the primary franchise granted direct by the State, or it may be a right conferred by general statute or special act, or such right may be a secondary franchise conferred by the State indirectly through the act of a political subdivision of the State by authority conferred upon such political subdivision by the State.[6] But "the original source of power over both the streets and highways is in the state."[6a]

It is this latter right which is known as the "indeterminate franchise."

Now in order to get a clearer idea of the thing, let us frame language which would confer the right. If it were the direct act of the State, it would read as follows:

"AN ACT RELATING TO THE USE OF PUBLIC WAYS BY PUBLIC UTILITIES

"BE IT ENACTED BY THE LEGISLATURE OF THE STATE OF.....

"Sec. 1. That all public utilities as now or hereafter defined by the laws of this State, are hereby authorized and granted the right to use the public ways of this State and the municipalities in which they are or may be doing business for the purpose of discharging their duties as public utilities."

If it were a municipal ordinance passed by authority of the legislature, it would read as follows:

"AN ORDINANCE RELATING TO THE USE OF THE PUBLIC WAYS BY PUBLIC UTILITIES

"BE IT ORDAINED BY THE MAYOR AND COUNCIL OF THE CITY OF HOPE:

"Sec. 1. That all public utilities as now or hereafter defined by the laws of this State doing business in this city are hereby authorized and granted the right to use the public ways of this city for the purpose of discharging their duties as public utilities."

We might add to either of these, "during good behavior and subject at all times to regulation, supervision and control by the duly constituted authorities of the State, and subject at all times to the right of any such municipality to acquire such public utility in such manner as is or may be provided by law and subject also to the penal and criminal statutes of the State now or hereafter enacted." We might go on ad infinitum, adding other provisions, but all this is pure make-weight neither adding to nor detracting from the right to use the public ways granted by the State; nor enlarging or diminishing the sovereign powers inherent at all times in the State to regulate, supervise and control its utilities, their rates and service by the duly constituted authorities of the State; or to condemn, take and acquire such public utilities; or to oust them from the use of the streets and from the franchise to be a corporation and carry on a public utility business on account of bad behavior and default in the discharge of their public duties. Such sovereign powers are not only inalienable as a matter of general law without specific authority, but they are specifically reserved inviolate by the State Constitutions in many States.[7]

"Indeterminate" public utility bills have been introduced in many legislatures, but they are so long and cumbersome and carry so much superfluous, immaterial, *indeterminate* verbiage that they have usually "died in committees" for want of proper understanding of their merits.

Such bills (aping after the Wisconsin act) usually provide for surrendering franchises, rights, special privileges, et cetera, held or supposed to be held by the public utilities. These are altogether unnecessary under the statutes and constitutions of most States because of the specific reservations of the power of eminent domain and the police power contained in such constitutions.[8] But they have created a mysterious fear, an indeterminate idea, in the minds of some public utility people

[6] Sec. 3367, R. S. Mo., 1909.
[6a] Owensboro v. Tele. Co., 230 U. S., 58, 67.
State v. Light & Development Co., 246 Mo., 618; 152 S. W., 67.
Iowa Tele. Co. vs. Keokuk, 226 Fed., 82.
State vs. Railway Co., 140 Mo., 539; 41 S. W., 955.

[7] Art 12, secs. 4 and 5, Missouri Constitution.
Art. 2, sec. 1, Oklahoma Constitution.
[8] Art. 12, secs. 4 and 5, Missouri Constitution.
Art. XVIII, sec. 7, Oklahoma Constitution.

may lose or forfeit something of value they have. Now, the simple, naked, legal, constitutional truth is that no public utility in this or in most any State has or holds, or ever did have or hold any privilege, contract right or valuable interest granted from the exercise of all the sovereign powers of a State, such as rate regulation, condemnation, taxation and the civil and criminal jurisdiction of the State, for the reasons above stated.

It is possible for the state, either directly or through municipalities duly authorized, to suspend temporarily a franchise contract a sovereign power, such as power of eminent domain, the power of taxation and power of rate regulation,[7] such contract must be duly authorized by the legislature, it must not be prohibited by the Constitution and it must be in clear and unmistakable language, admitting of no doubt. To doubt a constitutional power, the statutory delegation of it to the municipal exercise of that power, is to deny it. The result is that there are very few such contracts. None whatever in many States because of constitutional limitations such as above referred to.

Thus that both the cities and the public utilities and corporations fondly cherishing the delusion that they have a franchise contract right of special privilege in rates, service, taxes or the municipal acquisition of the plants are scheduled for a rude awakening when the final test finds such franchise grants ultra vires.[8]

In connection it is interesting to note the fact, generally appreciated, that in most of the hard fought leading cases that have gone to the Supreme Court of the United States involving the rights of public utilities the principal question has been the authority, and jurisdiction of cities either to confer or to deny regulate these rights and that most of these have been decided strictly construing delegated rights of the cities and denying assumed or implied powers assumed by such cities.[9]

Before undertaking clearance of the underbrush, let us square look at the thing we are talking about. It is more or less than the perfectly normal right to all alike except a few public utilities to use the streets in a perfectly proper normal and legitimate manner in the carrying on of an authorized legitimate business. Have, more an essential industry done it on for and on behalf of the state in the performance of one of its duties to its citizens? In other words the proper use of the public highways.

It is seen that the use of the public streets and roads is something to be bought and sold, bartered and traded for and auctioned off to the highest bidder, from which the public can economically or

[illegible]

legitimately realize an income or profit is altogether erroneous, unsound economically and legally, prejudicial to the growth of the community and discrimination against one class of citizens, the consumers and preferential in favor of others the non-consumers.

Every dollar exacted and burden imposed upon the use of the public ways reverts back upon the consumers with interest and costs. It is a wholly erroneous conception of the purpose of public highways.

The Supreme Court of Kansas not many years ago said in a gas pipeline right of way case: "A public road, as a way of traffic and transportation must, so far as possible, meet the demands of the people and is subject to be used for such purposes by any means not destructive of its use as a public thoroughfare. When such ways first came into use the means of travel were on foot or on the backs of beasts. Later articles of traffic were transported by wheeled vehicles drawn by horses and oxen and that is the general method employed today. It could not however be held that the highway could not be used for the transportation of passengers and for the traffic by automobiles. * * * The transportation of commodities on the highway is one of the uses for which it has always been maintained. The means however used by the gas company in the transportation of its gas are exceptional. A demand for this method has not heretofore existed in this State. Just shall this fact alone deprive the defendant of the use of the highway for a usual and *proper purpose*, unless such use necessarily obstructs or materially inconvenience or endanger public travel?" "The use of a rural highway by a telephone company is not an additional servitude for which the owner of the fee can recover compensation." "It is variously defined or held to be for passage, travel, traffic, transportation, transmission and communication. * * * The use is not to be measured by the means employed by our ancestors or by the conditions which existed when highways were first devised. The design of a highway is broad and elastic enough to include the newest and best facilities of travel and communication which the genius of man can invent and supply. The public highway is maintained for the transportation of the commodities of the country and the means employed for such purpose need only be such as not to interfere with public travel to the extent heretofore stated."

Have we not reached that state of civilization where we can think of public highways in terms of the public use, "public service and public welfare" and not with reference to petty political towns and pelf, Home Rule weaknesses and class prejudice. Have we not advanced far enough to look the truth in the face, clear away the camouflage and high sounding meaningless verbiage, such as "indeterminate franchises" and call this thing what it really is, merely street rights made feasible street rights. We can all see grease in by that name.

[illegible]

When the State has created and maintains at great public expense a Public Service Commission and staff of assistants and experts clothed with plenary power to regulate and control public utilities, their rates, service, rules, practices, accounting, capitalization, financing and investments; and has divested municipalities of all such power and has required that Commission to fix and establish reasonable rates and provide for continuous and efficient service, it is time the State should recognize the proper use of the public ways by public utilities in the discharge of their public functions. In this and many eastern states, indefeasible street-rights are expressly granted or recognized by legislative enactment.[12] The Supreme Court of Missouri, construing the Public Service Act recently said: "He who reads that act and does not see a complete rounded scheme for dealing with the business of public utilities at every point where the shoe pinches the public or the utility, reads it to little purpose."[12a] In fact, and in constitution law the whole scheme of rate and public utility regulation is futile without indefeasible street-rights for the obvious reason that a public utility is entitled to amortize its investment out of earnings during the life of its term franchise;[13] this is necessary because it has no assurance and no power to enforce the renewal of its term-franchise at the expiration thereof.[14 15] Whereas, a public utility operating under indefeasible street-rights is entitled to earn only a fair return upon its investment, resulting in lower rates.[16]

Now, having come to recognize this right in its true and simple sense, let us point out its merits and demerits, if any.

1. It may be defined as a mere right to use the public ways in the discharge of an essential industry, during good behavior and subject to all the laws of the State until condemned or acquired by the State or municipality.

2. It is a right enjoyed by all other persons, natural and artificial, including railroad, express and Pullman companies[17], telegraph companies[18], telephone companies[19], ferriers, pipe line companies[20], bridge companies, stage coaches, bus and hack lines, jitneys, inn keepers, hotels, banks, insurance companies[21], elevators and warehouses[22], newspapers and stock yards, of conducting a "business affected with a public interest," a public *"use"* business, subject to state regulation, all enjoying the common use of the public ways in the carrying on of their business. No other business is under such a handicap. Imagine all these public industries coming to the cities asking the right to use the streets and continue business every few years—it is just as reasonable and more so, for the losses and injury to the public would not be so great.

3. It has been adopted in Wisconsin, Massachusetts, Indiana, Michigan, Arkansas, District of Columbia, Porto Rico, the Philippines, and all United States Government grants, and State grants to state-wide utilities such as telephone and telegraph companies.

4. It is in line with the progressive thought of the times and has been recommended by Public Service Commissions in practically all States, and by engineers, economists and financiers.[23]

5. All public grants, either by the Federal Government, the State or its political sub-divisions, made without time limit, are held by the courts to be perpetual or indefeasible on grounds of public policy to avoid the confiscation of property and impairment of vested rights. "To say that the right to maintain these appliances on the public ways was only a license which could be revoked at will would operate to nullify the charter itself and thus defeat the State's purpose to secure a telephone system for public use. For manifestly no one would have been willing to incur the heavy expense of installing these necessary and costly fixtures if they were removable at the will of the city and the utility and value of the entire plant be thereby destroyed. Such construction of the charter cannot be supported either from a practical or technical standpoint."[24] The adjudicated cases all show that street-rights grants resulting in vested property rights are liberally construed by the courts in the interest of public policy, whereas short term-franchises purporting to limit or restrict the sovereign powers of the State such as rate regulation, are strictly construed against both the city granting them and the company claiming under them, thus showing a wise judicial policy of preserving both property rights on the one hand and the full freedom and integrity of the State's functions on the other.

6. The short term-franchise is an economic waste, compelling the destruction of much useful and valuable property at the end of the term;[25] the tearing up of the public pavements and ways; requiring high interest rates for investments; drives capital out of the industry and requires high utility rates to the consumers to amortize the investment during the term;[26]; all theoretically pro bono publico, but the consumer "pays the freight" with interest and costs.

---

[12] Sec. 3367, R. S. Mo., 1909. State ex rel Subway Co. vs. St. Louis, 145 Mo., 551; 46 S. W., 981.

[12a] State ex inf. vs. Gas Co., 254 Mo., 515.

[13] Brymer vs. Water Co., 36 Atl., 247.

[14] Denver v. Water Co., 229 U. S., 123.

[15] See article by author in American Gas Institute News, March, 1917.

[16] Houston Ry. Co. v. Storey, 149 Fed., 499.

[17] Sec. 1763, G. S. Kan., 1909.

[18] Sec. 1789, G. S. Kan., 1909.

[19] Sec. 1700, G. S. Kan., 1909.

[20] City of LaHarpe v. Gas Co., 69 Kan., 97.

[21] German Alliance Ins. Co. v. Kansas, 233 U. S., 389.

[22] Munn v. Illinois, 94 U. S., 113.

[23] Report by Milo R. Maltbie, Chairman Pub. Serv. Com., 1st Dist., N. Y., pp. 25-28. Development of Water Power, Senate Document No. 147, Address: "Some Features of State Regulation of Pub. Util." by John H. Roemer, Wisconsin Com., p. 22. H. E. Hogueland, Rate Expert. Recommendations to Gov. Capper. Pond on Pub. Util., sec. 120. Address by Halford Erickson of Wis. Com. before Ohio Electrical Convention. Address by Judge J. L. Clark of Indiana Commission.

[24] Louisville v. Cumberland Tel. Co., 224 U. S., 649; In Re Kings County Elevated Ry. Co., 104 N. Y., 97; 13 N. E., 18; Russell v. Sebastian, 233 U. S., 195, 204; Iowa Tel. Co. v. City of Keokuk, 226 Fed., 82.

[25] Denver v. Water Co., 229 U. S., 123.

[26] Brymer v. Water Co., 36 Atl., 249.

ar other hand, normal or indefeasible street
ls all this waste It is economically sound,
utility to finance itself on the lowest interest
re full and complete state regulation of rates
only of a fair return and not the amortiza-
entire investment within a short fixed term
r limited term franchise and the policy of
regulation are so incompatible and irrecon
they both cannot stand together We believe
urts will ultimately hold that the adoption of
policy of regulation and the requirement in
that the service may not be discontinued
consent of State authority and that the
be reasonable and only sufficient to afford a
on the investment supersedes and repeals
anchises, and confers, by operation of law,
street rights

the term franchise, if duly authorized, may
ual and suspend the exercise of the power
domain thus barring the municipalities from
condemning and acquiring the public utility
municipal ownership is desired, while the grant
indefeasible street rights is no bar to the
the power of eminent domain and the acqui-
ree public utility plants by the municipalities
ts property like all other property, is held
he sovereign power of eminent domain and
en for public use by due process of law at

the indefeasible right to use the public
lizes the cost of utility plant construction
r present and future generations, while the
use usually overburdens present consumers
construction costs for the use and benefit of
r generations

ostera public utility industries and invites
the business and into the State In fact, it
tically impossible to finance the construction,
e improvement of public utilities without
street rights In most States, either by
the legislature or by construction of
ed upon public utility corporations, in
street rights are held by many public utilities

indefeasible right to use the public ways
the business and the permanent proper
e integrity of the investment in public util-
fundamental principle underlying the whole
rate regulation by commission Without it
rate regulation are fruitless and the mum-
Public Service Commission is a waste
for the reason that a public utility, such
Having an investment of $10,000,000
g under a 30 year term franchise would be
amortize one twentieth of that investment
per year which amount on an annual volume
of M cf sales would require an addition
per thousand to the rate affording a "fair
return" on the investment This amount the people must pay for the privilege of the "Home Rule" politicians having a personal row with their public service servants

12 Term franchises usually carry unreasonable and costly requirements such as the ancient standard of "candle-power" gas necessitating the expenditure of much money to make the gas self illuminant whereas, in the modern art gas is used for lighting in the incandescent mantle and is employed almost exclusively for heating and the Therm in either case is the only proper standard We are all familiar with some old dinky horse-car line, some obsolete arc electric light lamp, or other requirement which costs large sums of money to maintain merely for the purpose of complying with some obsolete provision of a term franchise All this is ultimately reflected in higher rates to the consumer and would be avoided under indefeasible street rights subject to full and complete scientific commission regulation

If there be any merit to the term franchise, no one has ever advanced it No one now defends it The practice of granting term franchises dreamed long prior to the modern policy adopted in some 47 states of rate and service regulation It originated and flourished shortly after the decision in Munn vs Illinois,* where it was held that the courts had no power to review confiscatory rates fixed by legislative fiat and the only relief was by appeal to the lawgivers It was therefore adopted not as a sane business proposition but as a means of evading the harsh rule laid down in the Munn case in an effort to establish "contract" rates protected against impairment by the contract clause of the Federal Constitution* However, at that time it was not commonly known to the bench and bar not to mention the general public that rate regulation was then and is now a sovereign governmental function always reposing in the State and could not be suspended or bartered away by its municipalities except by clear constitutionally conferred legislative authority It was also deemed necessary to have these term franchises renewable at frequent intervals so that the municipalities, then vested with power to deal with public utilities could readjust the rates and service conditions periodically Thus it appears that under the modern policy of regulating these public utilities by state commissions there is absolutely no excuse for the term franchise

But some one will say that to grant indefeasible street rights direct by the legislature would deny the municipalities their right to control their own affairs would violate that sacred doctrine of "Home Rule" The answer is that the municipalities never had that right There is no such thing as imperium in imperio in the American scheme of state governments The State is the supreme sovereign except such powers as are delegated to the Federal Government The cities

* 94 U. S. 113
* Art. II, sec. 10

To Help the Consumer

Efforts the Natural Gas Companies are Making to Help the Consumer get the Greatest Value from His Gas Service

[illegible]
[illegible] Manager [illegible] Dallas, Texas

[illegible] the context of this article it should be borne in mind that the surest guaranty to success is a customer satisfied with the price that he pays for natural gas and likewise satisfied that the company [illegible] is putting forth its best efforts to assure to him the greatest value from his gas service. Certainly a better day has now come when more and more, the great thinking public whose composite judgment deliberately formed is almost infallible on any subject, realize, as do the utilities, that the relations between the utilities and the consumer are so intimate and interdependent that what is helpful to either is helpful to both, and what is harmful for one is harmful for all and the motto of [illegible] "One for All and All for One," [illegible] application.

[illegible] necessary in natural gas service [illegible] gas field and the point of consumption [illegible] by long distances, thus necessitating [illegible] expenditures for pipe lines, compressor [illegible] makes it impractical for one [illegible] and so necessary funds are [illegible] the public at large, and the results [illegible] to the public in the cities to [illegible] natural gas is deliverable. On the one hand, a [illegible] service, on the other the utility [illegible] a living return in order to be able to secure [illegible] investing public funds for the large outlay [illegible] giving that service, and after all, whether [illegible] relationship is considered from the standpoint of the individual in the home, securing service, or the standpoint of the great users, like a hotel with its thousands of guests securing that same service, different only in degree or from the standpoint of the utility furnishing that service or from whatever standpoint, when you look through the form to the substance you find at last that it is personal, and the relations are between living sentient human beings, and essentially the whole fabric of the relationship is direct and personal. It is, of course, the merest platitude to say that if you destroy the consumer you destroy the utility, and likewise if you destroy the utility you destroy the consumer, and so their interests are one, and this fact should never be overlooked.

The subject of this Article. And no natural gas utility in the present day fairness and philosophy ever overlooks this fact, but, on the contrary, having it constantly in mind in all its activities, it regards its consumers of the first consideration and so among the chief things in that consideration it is unsparing in its efforts to help the consumer get the greatest value from his gas service. What these efforts have been, are, and should be, is the particular subject of this article.

Natural Gas A Boon. Natural gas is a boon to the people whose privilege it is to enjoy the use of it, but in common with so many of the blessings of life it is often never fully appreciated in a community until it is gone. The realization that the quantity of natural gas now available is very limited, and is not inexhaustible is gradually dawning upon all thinking people. Herculean efforts have been made by the members of this Association to inform the people of the conditions affecting their natural gas supply to the end that full cooperation of the public and natural gas companies should be directed in a real conservation policy in the consideration of which not the least factor is the efficient use of gas.

Conservation. As the greatest value will be realized by having the greatest period of time during which the customer will have the privilege of using natural gas, "Conservation" is of necessity the key note to the ultimate success of these activities.

Waste. The extent that a company can go in its search for gas, its expenditures for reducing waste in the field, on its trunk lines and distributing systems is measured largely by the price that is paid for its product. Many communities today are still using natural gas piped from hundreds of miles away, and paying therefor, a price per thousand cubic feet that, when

fairly considered, is less than the amount necessary to cover expenditures that ought to be made for the proper maintenance and depreciation of the distributing system alone, with a large waste as a result thereof. It is quite evident that such conditions do not make for an extended life of the natural gas supply. This statement is by no means fanciful or theoretical.

A natural gas company that is receiving an unremunerative or non-compensatory rate for gas in its fight to survive will rock along with its system deteriorating, and with no more work on it than is absolutely necessary to keep going, thus resulting in excessive waste, among other things; and while it may not be particularly germane to the general subject under discussion, I may say that natural gas companies ought to receive a compensatory rate, not merely to pay a reasonable per cent upon its investment with all proper amortization allowances, on account of the great hazard of the business and the likelihood of sudden and complete failure of any gas field, but also to enable it to maintain its system so as to obviate as far as practicable all waste, and so as to give the most efficient service.

A reduction of waste commences in the gas fields where many of the companies, after years of unceasing efforts, have succeeded in practically eliminating open, outside lights and fires, and are gradually limiting the use of free gas by the tenants on leases to sane quantities per annuam.

Legislation.—Legislation, when preceded by conditions tending to make the market price for natural gas somewhere near the price of competing commodities, has resulted in the limiting of the criminal wasting of immense volumes of gas in the field by operators drilling for oil and accidentally bringing in gas. There is much yet to be done in this regard, especially in the Mid-Continent field. In general, loss and waste are least where the price of gas is highest. This is only another proof that gas must first be made worth saving in order to effectually obtain a saving.

Prolonging Life of Field.—The installation of costly compressing stations for natural gas from low pressure wells where the gas would not otherwise be available for pipe lines is doing much to lengthen the period that natural gas may be served, by increasing the quantity of recovery from the sands. It stands to reason, of course, that no one will operate a well when the cost of operation exceeds the return from it, but development of processes for gasoline recovery from natural gas has enabled the producer to operate low-pressure small-capacity wells that would be wholly unprofitable to maintain and operate without the additional revenue obtained from such gasoline production.

Importance of Proper Pressure.—The yard stick by which refinements of the natural gas service are measured is a comparison along reasonable lines with manufactured gas service, together with more or less of a comparison with other competitive fuels. Manufactured gas is distributed almost universally at pressures varying approximately between two and four ounces, whereas, up to a few years ago, eight ounces was the standard generally maintained by natural gas companies. To a degree, lowering and maintaining more uniform pressures at consumer's premises will permit a better and more permanent adjustment of appliances, resulting in a saving in the use of gas, and improved service. Where the economic conditions have permitted, much has been done in this direction.

It should, of course, be remembered that the cost of manufactured gas is considerably higher, and has been at all times considerably higher than the price paid for natural gas. Due to such higher prices, the number of users of manufactured gas and the purposes for which it is used in any given locality, have been comparatively limited, and the result of this has been that the volume of gas used in cities served by a manufactured gas plant has been vastly lower than the volume used by the same city after natural gas has been served in such city. It can be safely assumed that the volume of natural gas used will be about three times the quantity of manufactured gas that the same city would use, and it can be said that there are substantial reasons for different pressures in supplying natural gas than those in supplying manufactured gas. At this time it is by no means definitely and accurately established what the relative pressures of natural gas and manufactured gas would be, especially when necessary economic conditions are considered. However, it is very generally believed now that in a natural gas service there can be some lowering of pressure below eight ounces.

The practice of the natural gas companies carrying higher pressures on their distribution mains was brought about in the early days when natural gas was introduced into the large cities using manufactured gas, and the low prices initially charged for natural gas, in comparison with the prices previously paid for manufactured gas increased the use, resulting in additional waste, and such increased use and increased waste created a demand in excess of the ability of the distributing systems to handle their loads at the same pressure carried in manufactured practices. The tendency to higher prices for natural gas has permitted a reduction in leakage in distributing systems, through the now higher maintainence appropriations, increase in capacity of new mains, and enlargement of old mains, which, together with proper installation of piping and efficient appliances by customers, are gradually permitting the carrying of pressures in natural gas service lower than the eight ounces standard so long maintained, but I may say in passing that due, as I have before indicated, to construction and economic conditions, it is exceedingly doubtful whether the pressures can be reduced to the lower pressures prevailing in some of the manufacture gas systems. A consumer can obtain efficient and satisfactory service at pressures lower than eight ounce by having his equipment and appliances adjusted an designed for use at the pressures carried. He will no have efficient or satisfactory service if the pressure o

are still, however, some obsolete types of ranges that are being made by manufacturers, and are still being purchased by customers, who thus do not get the efficiency that should be obtained.

Many of these facts and suggestions in whole or in part have been brought to the attention of customers by gas companies, and there are still other activities along this line, of which mention may be made of the following:

(1) *Gas Appliance Adjustment:* Instruction should be given the company's own employees in the proper type of appliance for various purposes and their proper adjustment. Too much cannot be said as to the need of the proper adjustment, since it not only directly affects the consumer, but a poorly adjusted appliance often causes the consumer to condemn the service in place of the faulty appliance.

No utility that deals with the public generally can ever afford to overlook the human nature that is ever present in all of us as to any service, especially when it is measured by an invisible mechanism, such as a gas meter. If a bill for gas, in the consumer's opinion, is higher than it ought to be, no matter how or what the reason, and no matter how unsupported such opinion may be in fact nevertheless, the fact remains that very often he is not satisfied, notwithstanding the most careful demonstration of the cause, but rather suspects that the real cause is in the measuring device, which he does not and can not see, and whether poetically inclined or not he is very apt to give vociferous approval to the thought, whether expressed that way or not, that his meter is like Tennyson's Brook, "For men may come, and men may go, but I go on forever." If his pipes or appliances have leaked, or if by reason of improper adjustment he has not secured the most efficient service, if he is the average customer, he has not sufficient technical knowledge to understand or appreciate how or where the waste has occurred, or how a leak so small could have a waste so large, and especially true is this as to any appliance not efficiently used, for the appliance is burning all right, apparently to him, and that is all there is to it; and therefore, the one sure course is to get every customer advised fully so as to assure to him and that he will know that he is receiving the very maximum returns and benefit for what he pays. A dissatisfied customer is never an asset to a utility, or to any other business, for that matter. And this brings us to the very important subject of meters.

(2) *Meters:* While to the average consumer a gas meter is more or less of a mystery, as a matter of fact, as one of the large distributing companies has expressed it, a gas meter is as simple and accurate as a standard quart measure; it actually measures the volume of gas by taking it in and pouring it out. The motive power that runs it is the gas that passes through to the consumer's piping and burners. If the burner cocks are all closed, the gas meter is motionless, unless there is a leak in the consumer's piping or appliances. The consumer can readily and easily test his piping and appliances for leaks or ascertain for himself the quantity of gas that any particular appliance will consume in a given time. The consumer should periodically close all burners and watch the meter dial. If the two-feet test hand moves, the consumer's pipes or appliances are leaking. If he desires to ascertain the quantity of gas that any particular appliance consumes, he can do it by cutting off all other appliances, allowing the one particular appliance to burn, and by watching the two-feet test hand of the meter register the quantity of gas used for a few minutes. In this way, he can keep closer watch on the quantity of gas that he is consuming.

I believe that companies can do well by issuing to consumers instructions in these matters, and many of the companies are doing so at this time.

(3) *Tests:* Testing laboratories should be maintained so as to determine the safety, utility and efficiency of all appliances on the market, and there should be co-operation with manufacturers to develop more efficient appliances.

(4) *Co-Operation with Local Appliance Dealers:* There should be co-operation with local appliance dealers where possible, to the end that they will handle only approved appliances.

(5) *Office Display of Appliances:* A display should be made in the company's office of approved appliances, with a well-informed demonstrator to explain their proper use, and if local conditions make it necessary, the company itself should go into the business of selling the proper appliances. These demonstrations may show both the proper and improper types of appliances together with correct and incorrect adjustment of same, as well as correct and incorrect use of same. Such a demonstration and display can be used at various times and for various occasions at many different parts of the city.

(6) *Newspaper and Other Advertising:* There is no better means of education than by judiciously advertising in the newspapers. There should be newspaper display advertising supplemented by advertising in booklets and pamphlets, showing the proper appliances and type of connection, and all possible benefits for the company and customer should be obtained whenever accidents occur from too small or from improperly designed gas heaters or from furnaces or other appliances without flue connection, or from rubber hose connections, to obtain the publicity that will be helpful as a caution to others.

(7) *Lectures:* The company could advocate having public lectures accompanied with moving pictures, showing the proper and improper combustion. Instructions could be given domestic science teachers in the public schools so that the children could convey the messages to their homes.

(8) *Societies:* There should be co-operation with local societies, Chambers of Commerce, improvement leagues and other organizations, and representatives of the company should visit the women's clubs, society functions, church gatherings, and these representatives should be trained in economic practices.

(9) *Official:* The United States Bureau of Mines inaugurated an extensive campaign on gas service and efficient use of gas four or five years ago, which resulted

Tomorrow: The day when idle men work and fools reform. — Nuggets

in the forming of the National Committee on Natural Gas Conservation, a committee of ten, of which Dr. Van H. Manning, Director of the United States Bureau of Mines acted as chairman, and on which were four members representing the natural gas industry, four members representing the public, and two members representing governmental and technical bodies. These men met a number of times and handled volumes of data, and finally issued a complete report on natural gas saving and efficient use which has been adopted by practically all of the industries all over the country. Many articles have been prepared by the Bureau of Mines in illustrating and telling about this work, and these articles have been printed and distributed in great numbers. The companies would do well to secure copies of these articles for general distribution.

10. *The Bureau of Standards.* The Bureau of Standards recently conducted a series of tests and made recommendations for improvement of natural gas burners and their work is invaluable to the public and the industry. This is only one of the many services that the Bureau has extended to the people to increase the value of their natural gas service. Pamphlets showing results of these tests, as well as recommendations should be secured and distributed.

11. *Natural Gas Association of America.* It would be amiss not to state that the Natural Gas Association of America, representing the industry in this country, has been back of and supported all of these movements in the interests of the consumer, working on the well proven theory that what is good for the consumer is good for the company, and that the Gas Association has even in the midst of a great deal of strife and turmoil followed its course of real duty along lines best indicated, in helping the consumer get the best value from his service. It is true that the Gas Association has not followed blindly a great many of the suggestions offered to it by some experts and others, refusing in this to be led off into doubtful fields, but pursued rather a course of conservative progress preferring to map out a course based only upon and after most careful and extensive reports and consideration, and the Gas Association by reason of its efficiency and caution, and careful consideration of all of these problems, has kept the confidence of the industry through it all.

12. *Individual Inspection.* I have heretofore referred to the fact that individual inspection of premises of consumers has resulted in a great deal of good. Many of the companies have made complete inspections of the premises of every consumer in many of the towns, and personal instructions and suggestions as to how the consumer could improve his service and save gas have been left with him.

13. *Public Organizations:* A great deal of good can be secured through cooperation with regulatory bodies such as Public Service Commissions and others, and their cooperation should be secured in an effort to help the consumer get the greatest value from his service.

(14) *Natural Gas.* Has printed a series of articles entitled "Art of Applied Heat." The data contained in this series cost many thousands of dollars to get together, and there is no question that if these articles are followed closely they will be of great assistance along desired lines.

(15) *Burning Gas.* Many of the companies have been for the past three or four years running in the newspapers daily and weekly advertisements showing the correct and incorrect method of burning gas. As already indicated I am a great believer in publicity through the press and much good can be accomplished in this line as in all others in convincing the consumer as to the correct method of burning natural gas.

(16) *Cooking Schools.* This is essentially a day of all kinds of applied sciences and not the least important among them is the so-called Domestic Science. It is not an uncommon thing for a newspaper to have a publicity campaign as to cooking schools, and actually have in these cooking schools gas ranges where food is cooked. Some of the newspapers regularly each year have one or two such cooking schools lasting three or four days. A gas company can do very well by availing itself of the opportunity of cooperating with the newspapers with respect to securing the highest efficiency from the gas burners and by securing specific instructions to the classes as to the correct method of burning gas.

Improperly Designed Appliances. All of these activities have brought excellent results, but it seems that now is the time to strike at the very inception of improperly designed and dangerous appliances, and formulate ways and means to bring about a condition that will prevent the marketability of such appliances, and every reputable appliance manufacturer stands ready and willing, as he has always done, to help bring such a condition about. This Association, the United States Bureau of Standards, America Gas Association, National Safety Council, and other similar organizations undoubtedly will cooperate with the gas industry in this matter.

It is now almost impossible to purchase an electrical appliance or anything electrical that has not been approved by the National Board of Fire Underwriters. This condition has resulted in a direct benefit to the public. Why cannot such a condition be brought about in the gas industry?

It is true that the gas appliances are subject to more variable and varying conditions in use than electrical appliances, but if this organization will put its energies and support back of the movement, as it has done in other activities, then it can be worked out.

Dealers and others handling gas appliances would prefer to sell only approved appliances, and in the interest of the public only approved appliances should be permitted the sale of other than approved appliances.

Conclusion. It is my opinion that a committee will be appointed to make investigations and recommend a course of procedure that will bring the desired results, as there is

nothing more important to the industry today than eliminating as far as possible the manufacture and use of appliances that are not only inefficient but dangerous to life and property. I know this is a subject that many of us do not like to discuss, but, as almost daily we pick up our newspapers and read of fatalities as a result of either improperly designed appliances or appliances in use for purposes for which they are not adapted, it woul dappear that the subject is important enough to warrant concerted action upon the part of the Association, and in doing this it is certain that the Association will be taking one further step forward in helping the consumer get the greatest value from his gas service.—*By courtesy Natural Gas Association.*

AMERICAN GAS ASSOCIATION

ON and after July 1 the headquarters of the American Gas Association will be located on the eighteenth floor of the Canadian Pacific Building, 342 Madison Avenue, New York City, telephone 4209 Murray Hill.

This modern building on the southwest corner of 44th Street and Madison Avenue is within a block of the Grand Central Station and is convenient to the Pennsylvania Terminal and to all principal local transportation routes.

The Association makes the following statement in the announcement sent out:

"Our members will find the new headquarters easy of access and in the heart of New York's hotel and shopping districts, and we believe that they will offer increased facilities in every way.

"In visiting New York or passing through the city, you are invited to make your headquarters at the association offices where it will be our pleasure to serve you in every possible way."

"SEEANDBEE" NOW ON THE ROUTE

The largest and most costly passenger steamer on inland waters of the world, the great ship "Seeandbee," with her sister ship, steamer "City of Buffalo," is now operating daily between Cleveland and Buffalo.

The "Seeandbee" is 500 feet long, 98 feet 6 inches wide, has 500 staterooms and 24 parlors de luxe, providing sleeping accommodations for over 1,500 passengers. In magnificence of appointment she probably is not excelled by any vessel afloat.

Passengers may board C. & B. Line steamer at Cleveland or Buffalo any evening at 9:00 (eastern standard time), enjoy a night of refreshing sleep and arrive at destination following morning at 7:30.

A special car-by-steamer service is maintained for automobile tourists, and it is evident from the ever increasing number of motorists who place their cars aboard C. & B. Line steamers that this service is immensely popular.

All railroad tickets reading between Cleveland and Buffalo (in either direction) are good for transportation on these steamers.

IMPROVED WARNING SIGN

J. H. Schalek, Pittsburgh, Pa.

An "open-day-and-night" danger signal. The sig. or signal consists essentially of a half or three-quarters inch rod, four or five feet long, pointed at one end and pipe-threaded at the other end. To the bottom of a regulation lantern is soldered or otherwise fastened a collar that will fit the threaded end of the rod. If the collar is cut in half, the lantern will stand on a flat surface as well as the unprepared lantern, as the bottoms are usually concave. The sign (Danger) is painted upon a 16 or 18 gauge sheet iron plate, 4 inches wide and 12 inches long, and riveted to the rod. A very good feature of this warning is that it may be seen from a great distance as when placed in the position recommended by this wrinkle the daylight sign will not obstruct its visibility. It may be filled while on "the job," and, by a one-armed man if necessary. It is not dislodged by the wind or an accidental bump as is the case with the hook method. The signs and lanterns may be carried as a unit—something that the man who does the carrying will appreciate. It may be constructed in the shop and without the aid of a blacksmith. The lantern cannot be broken by bumping against the rod during windstorms as is often the case when the older method is employed.

IMPROVED WARNING SIGN.

This form will meet the needs of one-armed *army men* if employed on street forces.

to such a contract fix the pressure and temperature governing in each case. When, therefore, gas is purchased under one set of conditions, and sold possibly under quite a different set of conditions, time and expense are required to make constant computations and adjustments. As the time approaches when gas manufactured from coal or oil is to be mixed with our natural gas, these matters of computation will become more complex. Conditions of saturation must be taken into account, and on account of the increasing value of the gas, the importance of exactness in the description of the cubic foot, becomes more important than in times past. If it were possible for this matter to be standardized so that all references to the cubic foot would have a definite meaning in the trade, it is believed considerable benefit would be obtained.

2. Consider the matter of heat value of gas. We speak of the b. t. u. value, but we have no standard form of expression to say whether we are referring to the gross heat value of the gas or the net value. This is important and may lead to confusion when natural gas is mixed with manufactured gas. It is unimportant in contracts dealing with natural gas only, but this matter should be standardized for mixed gases.

3. It is important that a standardized method of determining the specific gravity of gas should be established. Some variations at present exist in determinations made by different methods, and as this matter is of prime importance in correct measurements of gas, the matter should be established on a standard basis.

4. All the operations pertaining to the measurement of gases are in need of complete standardization. A code should be established covering these matters and a complete and permanent installation covering parent orifices, should be maintained with which all forms of meters could be compared for correctness. The importance of this matter is apparent to all and should be made the subject of very exhaustive and careful study.

5. A standard method of testing natural gas for gasoline content is much needed. The value of gas may, in some instances, become affected by its gasoline content, and because of the fact that the quantity of gasoline obtained from gas varies with the method of extraction employed, and varies with the quality of the gasoline which it is proposed to extract, there is at present no clear understanding of what the term "gasoline content" really means in a commercial sense. By establishing some method of testing, and some standard quality for the product, this condition of uncertainty could be eliminated, and a standard for reference established.

6. Many of the questions concerning the quality of mixed gases have to be determined by analysis, and it appears advisable that a standard method of making such determinations by analysis should be agreed upon.

7. The Natural Gas Association should codify and fix standards which it could approve for the efficiency of cooking stoves, hot water heaters and lighting fixtures. The work which has been done by the government bureaus, and by individuals working in different laboratories, would be of assistance in the formation of such a code.

8. To assist in the prevention of loss of natural gas through the leakage of pipe lines, the Natural Gas Association could, it is believed, establish standards of efficiency which could reasonably be maintained for pipe lines of different sizes and of different construction. To do this it would be necessary to establish a standard method for testing pipe lines, so that if at any time it should be required to determine the leakage of a given pipe line, the manner of making this determination would be conducted in accordance with the standardized method. Questions concerning pipe lines are frequently brought up in connection with conservation matters, and at present there exists no well defined conception of what quantity of gas a line of any given size and length will lose per day, when working under a given set of conditions. It would require considerable study to determine this question, but it should be determined, so that gas companies may know what reasonable efficiency their pipe line systems should have.

9. A standard should be established for the quality of the material used in making the joints of pipe couplings other than screw joints. The thought here is that all rubber used for this purpose should have certain resisting qualities against the attack of gasoline. This has to do with the general purpose of conservation.

10. A code covering the materials used in pipe line construction should be formed in which standards should be set up for matters such as the following: Quality of gasket material to be used in flanges and under saddles, having in mind the various different conditions covering the use of such materials. The proper weight of fittings and valves for lines of different sizes and working under various pressures. This code should include standards for the gas connections at compressor stations, the location of safety gates with reference to buildings, the proper arrangement of gate valves at compressors, and the size and position of safety valves on such compressors. A standard plan for connections and drips at wells should be established, having in mind the best method of protecting a well, and at the same time allowing for convenience in operating the well without wasting gas. There are many other matters which might be suggested as coming properly in such a code, but will not be discussed at this time.

11. For the purpose of reducing expenses in the apparatus necessary for drilling operations and pipe line construction, standards should be agreed upon covering matters which affect the interchangeability of apparatus made by different manufacturers.

It's the ability a man uses, not the ability he possesses, that regulates his reward

oregoing specific matters have been mentioned to show how the matter of standardization applied to the natural gas business, and to draw n to the wide scope and effect of such stand on The single purpose of establishing stand to assist in simplifying practical operations, to n eliminating misunderstanding in doing busi ed to and in reducing waste and to operate to economy A vast set standards such as we have mentioning does not in any sense become an en g handiwork There are only a very few mat ich are of that order of importance in busi ich merit standardization but when a matter tain this importance it should be standardized his undertaking cannot be accomplished in a ime The general committee charged must ve careful study to determine which specific connected with the industry should be stand- After this has been accomplished the actual nature of what each of these standards should be, ork of a special body of men delegated for that and in many instances the work of these special will consume a great deal of time and entail much It is needless to say, however that the benefit to istry is great in proportion to the efforts and time ed in the work

ated before the standards now existing in the ufacturing industries of the country have been at through the voluntary efforts of associa ecular to carry in importance Several years ago ered that these independent efforts were lead some confusion in the establishment of stand ed for that reason, these associations were with a number of technical societies and gov t bureaus and formed what is now known as erican Engineering Standards Committee This tee has a permanent office in New York City e a membership of 47 men These men are es and represent six engineering societies 11 al associations and five government bureaus artments When any of the associations thus ted deem it advisable to establish a standard matter pertaining to the industry with which nected the matter is taken up with this main tee The main committee does not itself es a standard but it forms a subcommittee by delegates from other associations and gov t bureaus which would be affected by the bject of such a standard and this subcom the work of actually forming the stand The main committee sees to it that in al element of the standard there has been together a proper body of men for the pur that all those affected have been properly ted In other words the main committee acts earing house for these matters and when the d has been finally established and approved it represents what the word standard means and effect accepted by all the industries

Natural Gas Association of America is not a r of the American Engineering Standards Com- mittee, but if it were desired to undertake the establishment of standards applied to the natural gas business, such for example as some of the matters we have mentioned it would be found much help and assist ance could be obtained in this work and a very much broader scope given to it, by the assistance of the various government bureaus and industrial associations

This paper has not mentioned a number of very im portant matters connected with the natural gas busi ness which it has been suggested might well be stand ardized, such as matters concerning standard forms of leases and agreements and matters concerning electrolysis measurements and in fact a great many mat ters of first importance but it is not our purpose to go into so much detail believing that the matter of prime importance is to bring clearly before the convention in a broad way, the necessity of standardization in the natural gas industry at this time because of the great assistance it will render in the future in conducting the business By Courtesy of the Natural Gas Association

FURNACE FOR MELTING SOFT METALS

To meet the demand for a low-cost medium size gas furnace for melting soft metals the Johnson Gas Appliance Company Cedar Rapids Iowa announces its No 30D furnace here illustrated This furnace stands 28 inches high weighs 100 pounds and has a removable cast iron melting pot holding 150 pounds of metal

Its three Johnson Patented Atmospheric Bunsen Burners are stated to develop any desired temperature up to 2200 degrees Fahrenheit and to consume only about 40 cubic feet of gas per hour Burners have shut off valves and pilot lights Two burners are sufficient for keeping the metal molten

The high efficiency of a metal melting furnace is ascribed to the Johnson Direct Air Regulator in its Bunsen burners

This regulator with a [illegible] that can be instantly adjusted to any pressure or quality of gas creates a sharp solid jet of gas with great force up the center of the mixing tube at any pressure without the use of forced air blast or blower producing the highest possible flame temperature

He who takes good care of the present, need never worry about the future

Transition in an Industry

Good Business Sense and Farsightedness Enable Appliance House to Continue Business and then Necessitate Factory Expansion

SOME years ago, the "hot-plate," then the "cooker,,' and a portable oven for use on the ovenless devices, comprised the bulk of the sales made of gas-cooking appliances. Later the "square" or "box range" came into existence as a commercial proposition. Then, back in 1905 or thereabouts, we saw the first cabinet-gas-range placed on general exhibition, not the first cabinet range made, but the first cabinet range offered in a general way to the trade.

At the first exhibition held by the National Commercial Gas Association in the Knickerbocker Building, corner Fifth Avenue and 20th Street in New York, that which to many was then rather a strange and indeed a new appearing cooking device was displayed. It was very similar in contour to the cabinet range of today, and if we remember correctly, it was displayed by Rathbone, Sard & Company, their booth being conducted by their Mr. Brown who has since passed away, his later years being spent in California.

Two things made an impression upon those who had to do with the management of that exhibit; we do not mean the only two things, but nevertheless two things, namely, the presenting of this cabinet range and the earnest and untiring attention that Mr. Brown gave early in the morning to his exhibit, later to the gas-men who were quick to spot the range and desired to look it over, and still later to the crowds of New York people who visited the exhibition. This was the show that preceded the great exhibition of the N. C. G. A. in Madison Square Garden.

Gradual has been the growth and development from the hot-plate to the wonderful products of the gas-range factory of today, in design, spot-welding, class of sheet-metal used, styles of gas-cocks found on certain makes, the self-lighter, the oven heat control, the finish, etc.

In 1922 the gas-range is, indeed, a marvel of beauty, compactness, efficiency, etc., but, as we have said, the transition period has extended over a number of years. However in the field of gas-arc lamps, matters have in changed almost in a flash, as rapidly as have developed the wireless telegraphy and wireless telephony.

At Madison Square Garden exhibition of the N. C. G. A., the General Gas Light Company supplied vast chandeliers, magnificent in design, all especially made for the occasion, and by use of their arcs on these chandeliers the main gas-arc-light illumination. Then, later, at the Atlanta (Ga.) show of the N. C. G. A., the same company supplied illumination by their arc-lamp method, and supplied other lighting effects as well, lamps mounted on beautiful columns or standards, inverted glass bowls, while at other shows still later, the gas-arc lamp also played a prominent part.

During a recent visit to the plant of the General Gas Light Company of Kalamazoo, we, however, saw but a few large cases filled with gas arc-lamp parts required in the assembling process to provide here and there a customer with lamps or parts as might be required.

We did not see rows of workmen at benches, and at lines of tools turning out finished lamps and parts of arc lamps, although it was not so very long ago when upon another visit to those same works, many men and girls and many machines and tools were seen employed in the sole manufacture of that illuminating product.

In our ramble through the works just recently, we looked into a room very ample in size and containing many shelves; upon these rested relics of the past in the form of dies and tools which, in their producing had cost many, many thousand dollars. These have not yet been consigned to the scrap-heap, although the demand for the product made with these has diminished.

To see a business thus practically wiped out, and vast investments in special equipment and tools buried forever, would have discouraged almost to the point of suicide some men of even balance and good sound sense, though Mr. A. H. Humphrey, President of the General Gas Light Company sailed through seas rapidly roughening with the storms of changing conditions, constantly on the lookout for a harbor where he might make a safe landing. Such landing was made when the "Radiantfire" was finally brought upon the market, this most excellent device opening to the General Gas Light Company a promising future. It was the rainbow of promise, yet much still remained to be done ere production could be accomplished.

The manufacture of "Radiantfires" began in the old building of the concern, in which millions of arc lamps had been constructed, and out of which these had gone to make the ways-of-the-night light, to help in the prevention of crime by brightening the way, to assist in lighting manufacturing plants where thousands of necessaries are made, and to lend themselves to a then ever increasing, and a still existing need of gas-illumination for commercial purposes.

Execute this: There is no such thing as a "little thing" in business.

usiness of producing "Radiantfires" increased as the sales of these clever heaters rolled up thousands So it came about that the General ht Company required a very large addition to er plant, more than doubling the building- whereby to provide area in which a great of new tools, many of them automatics, might lled in order to reduce the cost of production, make it possible to meet the wonderful growing for "Radiantfires"

ng through the works, our guide, one of the Mr A H Humphrey, all are actively con ith the business, pointed out where the old ended and the new began, the new, as we have ing been made necessary by the remarkable for this particular heater product, which was the institution to rise, as it were, much like a from the ashes of the lesser demand for "Hum s arc"

umber of immense die presses and dies, running ay, many thousands of dollars, the automatic d drill presses, likewise running into thou d thousands of dollars, a bulling equipment and room that would surprise one not prepared to arge and complete an outfit, broke upon our we passed through the machinery and other nts into the finishing department.

re reminded of the words, "The King is dead, the King" for on the one side were gas are s and tools that had cost vast sums of money, them now dead while on the other side a great more than half of it brand new, with new ools the like of which could not elsewhere be made of other enormous especially equipped fac- ts in extensive lines of manufacture

the "Humphrey Arc" to the "Radiantfire" em a mere step, simply a re arranging of mat plant requiring but a brief period, and then ut a completed product in large quantities, the conditions have indeed been most trying, ing demand for arc lamps on the one hand, rest an unknown heater and a new enterprise other Who would not have shuddered in the task of swinging from the one line to the most in the time required for a pendulum to and fro?

Humphreys and his sons, and W F Weadley sed through periods of untold perplexity, days ts of planning, and days and nights devoted eating of this model factory filled with its finest many having to be of special design Then ning and carrying out of sales methods and s that should return the funds necessary to the of such a mammoth undertaking

industries in the field have, like the General ht Company, found it necessary to rearrange thods, to scrap patterns, jigs, templates, etc, to meet new demands, relinquishing old lines, general "shifting about" with an ever-changing trend of affairs, it is seldom that so absolute a relin quishing of old lines and the finding of new, and the adjusting of oneself to absolutely new lines comes upon the horizon, therefore we have particularly cited this institution, although the gas interests of the country should never forget that all of the appliance manufac turing concerns every year without entailing one cent of cost upon the gas-men, scrap thousands and thou sands of dollars of equipment and material, and spend equally vast sums in the bringing out of new equip ment which, if the gas man will be broad-minded, he must recognize as directly in his behalf, even though the manufacturer's purpose may be in his own behalf

Furthermore, the gas man should always keep in mind that if it were not for the spending of thousands upon thousands of dollars in experimental work, in readjust ing appliances in bringing out of new appliances, and in adding useful devices to old line designs by the manufacturers of appliances, competing industries would promptly walk away with the gas man's business In other words, while methods of gas manufacture change, gas itself as viewed by the public is exactly the same as for years past, even though the gas man may change and be allowed to do so from candle power to B t. u. basis, etc

So far as the public is concerned, and the public is the market, it is really not gas that sells gas, but it is the appliance that sells the gas In other words, what the public *sees* is the appliance, the product of the appli ance manufacturer It is this that tempts the public to use gas It is this that induces the public to continue using gas' it is only, in part, gas itself that holds the trade

To judge as to whether the foregoing is true or false, just allow the gas-appliances offered to the public today to be of the design, workmanship, and finish of the appliances that were offered to the public some years ago, even though the gas be the gas of today and we how quick would be the turning of the back of the public on gas, and would be the public's accepting of com peting methods of cooking heating, water heating, and the performing of other service that today is held for the gas interests through the exceedingly well designed efficient, cleverly appointed and elegantly finished gas appliances as seen in this year A D 1922

It has often been said that the gas companies should spend much time in the selecting of men who would properly represent them when coming in touch with the public The same applies in the matter of the selecting of gas appliances Only those should be selected that will best represent the interests of gas and in view of the immense importance of this branch of the busi ness, the gas appliance manufacturer should be given every possible consideration on the part of the gas man and every encouragement on the world to produce the very best in design efficiency, workmanship and finish that money can buy and then the gas man should be willing to pay the gas-appliance manufacturer accord ingly

If you have any hope of a managerial position, first learn to boss emotion—Kaufman

Many a chandelier, fixture, and portable manufacturer has brought out exceedingly attractive lines for gas use, while the gas-companies have been the ones to kill the goose that for years laid the golden eggs, and that would still continue to lay golden eggs for the industry, if the goose had not largely been, and is not yet being strangled by the greater "goose," viz., not a few of the gas-men of today.

Let us recount actual composite happenings as follows: A gas appliance manufacturer producing beautiful chandeliers, beautiful portables and beautiful side brackets for gas use shows them to a gas manager, who says, after examining them, "They are very beautiful and very attractive; but how much will you sell this plain cheap fixture for?" A thing that in the open market might sell for $1.00 or $1.50, forgetting that it is not gas that sells gas, but that it is the appliance, its beauty, its attractiveness, its convenience, its finish, and, in a word, its acceptability, that sells the gas.

Indeed, it has been lamentable, this forgetting on the part of the gas-man, that it is not *his product that sells his product,* but that it is the appliance that sells it, for having forgotten this absolute essential, the gas-man has resorted to all sorts of means and methods to beat the appliance manufacturer down in price, when he must have known that to do so meant to curtail the funds available in the gas appliance manufacturer's treasury, thereby making it compulsory that he should skimp on the product instead of making it so attractive that one could not resist a purchase, which like the buying of the phonograph ensures the continued purchasing of the necessary product, without which the appliance purchase would be useless.

The gas-man should always keep in mind the fact, because it is a fact, that it is not gas that sells his gas, but that it is the attractiveness, and the real utility of the appliance that turns the scale in the purchaser's mind. It's strange; isn't it, that the all-important gas-appliance manufacturer until the National Commercial Gas Association gave him the opportunity to assert himself, was by the gas-manager who absolutely needed the appliance manufacturer, called a "camp-follower" or "a peddler," while instead he should have called him a "fellow" of the industry.

There were back in 1905, and there have been since, glorious examples among the gas-men, of breadth of vision and of appreciation of the value to the industry of the gas-appliance manufacturer; yes, there have been not a few of such, but it is of those of narrow vision, and there have been many such, that we speak The vision of the gas-man has been diverging rather than converging, as was the tendency a few years back. This diverging process, in other words, the appreciating of the appliance-manufacturer, will grow just as fast as the gas-man grows into a realization of the fact that it is largely not the gas that sells the gas, but it is to a very large degree the appliance that sells the gas, even though the gas itself may be a thing of wonderful convenience. The public is most impressed with what it sees, and gas it cannot see.

Sales Co-operation

By WILLIAM RIVERS BELL,
Sales Manager, Haverhill (Mass.) Gas Light Co.

THE problem of selling more gas is one of very vital interest to the gas companies today and of especial interest to the Sales Departments, because that is their particular job. What are we as Sales Departments doing to solve this problem? Are we keeping the gas sendout up or is it slipping back day by day from the recent high mark?

During the period following the close of the war there was a very large demand for gas and the increased sale resulted in many of the sales departments taking the attitude that the gas idea had been thoroughly sold and consequently they could sit back and take it easy.

However, with the advent of the depression the error of this attitude was shown and the realization came that if the send out was to be kept up, some very drastic action must be taken.

The large industrial load that most gas companies obtained, often without any effort on their part, suddenly decreased to a small percentage of its former volume and the truth was forced upon us that the use of gas in the home is of vital interest to us if we are to minimize the effect of industrial depression.

In attacking the problem of the sale of gas in the home, we should analyze the methods of the past to see wherein they can be improved.

During the period of the war and the inflation at its close the personnel of the sales departments was sadly neglected, with the result that most departments were forced to build up a completely new organization. This requires much time and effort and should receive the proper attention so that the department can be brought to a high standard of efficiency and ability.

For many years the gas companies have felt that the sale of gas appliances rightly belonged to them and that any dealer in such appliances should be frowned upon and discouraged. The practice of price cutting was resorted to so that this competition was stifled.

Competition automatically weeds out the incompetents and rewards the hustlers

the people which taxing officials would not dare levy directly. The burden in our state, and I presume the same applies in other states as well, is becoming greater all the time. We are very effectively driving home to the people the fact that a public utility has no source of income except that which it collects from its customers as charges for services, and therefore it is necessarily the public itself which must pay these taxes.

Occasionally a radical will protest against the public relations movement and attempt to question the propriety of bringing to the attention of the newspaper publisher matters in connection with your industry, such critics expressing the view that the reporter himself should find his own news rather than have it made to order for him. I think this criticism has been ably answered by Mr. Atherton Brownell in a recent article in the "North American Review," in the course of which Mr. Brownell makes this statement:

"We may not necessarily go as far as to agree entirely with the newspaper cynic who defined 'news' as 'any violation of any one of the Ten Commandments,' but it is indisputable that in common practice that which is compelling news, that which bears the editorial blue penciled 'must' across its face, is of some sensational happening, something picturesque and attention-arresting, something that can be made into a 'story' and the more 'human interest' its possesses, the better. Bad news flies fast—it meets the reporter more than half-way. Good news is often retiring and conceals itself. The function of the real publicity man is to give it wings. The news prepared by the modern publicity man is the news of construction. It has been sought out from a mass of data or other information in which it is so deeply embedded that it could never be found by the hurried reporter seeking the news that shrieks aloud to be told."

Even though we have attempted a great deal during a single year in Ohio, we realize that the work is just beginning and the surface has only been scratched. Thousands of women's clubs are meeting every week in our state, and to them, as rapidly as possible, will be taken the story of your business. Our high schools will afford a fertile field for the public speaking work, as will also our churches.

In conclusion, I know of no better suggestion to leave with you than that of stimulating within yourselves and those in your employ, a greater pride in your own business, if such a thing is possible. Your industry has meant much in the development of America industrially, it has meant much in adding to the comfort and convenience, if not the actual possibility of existence, in millions of American homes. Great credit is due you gentlemen for the fact that you have unselfishly urged at all times the conservation of your product that future generations may reap some benefit from a gift which nature has bestowed. The efficient handling you have given the problems of your industry in the past demonstrates your ability to care for the great needs of the future, and when the day comes, as inevitably it must, when in some communities there will no longer be this product of nature available for mankind's use, I am quite sure that the situation then arising will be ably handled by the men who have unselfishly extended the usefulness of natural gas for at least another generation.—*By courtesy of the Natural Gas Association.*

"OILWELL" CHANGES

Mr. Louis C. Sands, Vice-President and General Manager of the Oil Well Supply Company, announces in behalf of the company, the appointment of Mr. Grant Hubley as also Vice-President, but "In Charge Of Sales," with Mr. Thomas Fleming, Jr., as likewise a Vice-President, he being "In Charge Of Production." Further changes include Mr. S. Clarke Reed and Mr. Thomas Fleming, Jr., as having been elected members of the Board of Directors.

The Oil Well Supply Company comprises an organization of exceeding ability from the elective officers on through the departments, every link in the chain, or if we might so state, every tooth in every gear in each department being well selected.

Mr. Sands as Vice-President and General Manager has long headed the general operations of the organization, advocating and carrying out the ideals of *concentration* and consequent effectiveness, even to the point of being a strong believer in a concise descriptive slogan for his company, namely the one combined word "Oilwell", it being indicative of the purpose of the institution, though the title, Oil Well Supply Company, is the official name.

Under the present form of organization as indicated in the announcement, efficiency is a foregone conclusion though by no means would the present changes indicate that efficiency had not existed prior to the present. The new arrangement but recently took effect.

IN picking executives, let's not look only at a man's successes, but let's look closely to see if he has any failures in his record. And let us particularly concern ourselves with the way in which he recovered. The real executive is the man who can take things as they come, good and bad, and handle them.

—Allen H. Dalton in Printers' Ink

Labor is the arm which feeds and clothes the world, and capital is the life-blood which keeps that arm alive

AROUND THE BELT

New Wells, New Pipe Lines, New Contracts, Additions and Extensions. A Fund of Valuable News Gathered for the Journal Through Many Sources

TRADE PERSONALS

[illegible] H. [illegible] of Bradford, Pa., has been elected [illegible] of the Pennsylvania Oil & Gas Men's Association.

[illegible] D. V. [illegible] Bradford, Pa., has been elected [illegible] and treasurer of the Pennsylvania Oil & Gas Association.

[illegible] Emmert, formerly connected with the Oil Well [illegible] Company of Pittsburgh, Pa., is now with the [illegible] Consolidated Company and will be located at [illegible] Wyoming.

[illegible] Thomas, Jr., has been appointed Vice [illegible] in Charge of Production, it is announced by the Oil Well Supply Company, Mount Vernon, Ohio. [illegible] has also been elected a member of the [illegible] of Directors of the company.

[illegible] S. Clarke has been elected to the Board of [illegible] of the Oil Well Supply Company, Mount [illegible], Ohio.

[illegible] N. [illegible], Manager of the El Reno Division [illegible] Gas & Electric Company, Oklahoma [illegible], was one of the speakers at the recent convention of the Oklahoma State Press Association at [illegible], Okla. Mr. Garrison has been elected to [illegible] membership in the Association.

[illegible] L. [illegible] of Oil City, at the annual meeting of the Pennsylvania Oil & Gas Men's Association, has been elected Vice President of that organization.

[illegible] has resigned from the office of Gen[illegible] Manager of the Hanover Oil & Gas Company, [illegible], Okla., held by him for some years, and is engaged in the general drilling and contracting business in Arkansas fields.

[illegible] has been elected President of the [illegible] Oil & Gas Company, Inc., a new concern [illegible] in Magnolia, Mississippi.

[illegible] it is announced by the Oil Well Supply [illegible] of Mount Vernon, Ohio, has been appointed [illegible] in Charge of Sales.

[illegible] D. has been elected President of the [illegible] Gas Company of Monroe, La.

[illegible] Donald, General Superintendent of the [illegible] Meter Company, New York City, has been [illegible] to the Board of Directors, and to the office [illegible] succeeding his father, the late William [illegible].

[illegible] has been elected President of the Okla[illegible] Gas & Electric Club of Oklahoma City, Okla.

Nelder, L. A., Assistant Secretary and Assistant Treasurer of the Louisville Gas & Electric Company, on the occasion of his fifty-year service anniversary as a remembrance from his associates in the company, was presented with a very beautiful silver service. The presentation was made by Duval L. McDonald, Vice President and General Manager of the company.

Olmsted, C. L., Superintendent of Distribution with the Logan Natural Gas & Fuel Company, Columbus, Ohio, has severed his connection with the company and is now attached to the Vacuum Staple Laboratories Company, Los Angeles, Cal.

Smith, J. D., Assistant to the General Auditor of the Oklahoma Gas & Electric Company, Oklahoma City, Okla., has been named Chairman of the Committee on Accounting Service for Member Companies, appointed by the N. E. L. A.

Transdale, L. D., at the annual meeting of the stockholders of the Natural Gas Company, Monroe, La., was elected Vice President of the corporation.

Wyoming Peake, A. W., formerly Chief Engineer of the Midwest Refining Company, Casper, Wyo., is now General Superintendent, an office recently created by the company.

DECEASED

Kane, William, President of the William Kane Manufacturing Company, Philadelphia, Pa., died at his home in that city recently at the age of seventy-two years.

Kemp, J. R., Chairman of the Sinclair Oil & Gas Company and President of the Sinclair Consolidated Oil Company, [illegible], died [illegible] at his home in Tulsa, Okla., [illegible] operation.

Troutman, F. A., natural gas operator of Waynesburg, Pa., [illegible] at his home [illegible] in June. Mr. [illegible] years of age at the time of his death. He is survived by Mrs. Troutman and five sons.

PER CUBIC FOOT—RATES

ARKANSAS. [illegible] requested that the Arkansas [illegible] petition for [illegible] affecting the rates in the city of Hot Springs. The court has granted a temporary restraining order regarding rates in Pine Bluff, Sheridan, Arkadelphia, Benton, Haskell, Malvern

Good will, like a good name, is got through many actions and may be lost by one

Arkadelphia, Gurdon, Prescott, Emmett, Hope, Garland, Fouke and Traskwood.

NEW YORK—*Fredonia*—The Frost Gas Company has applied for permission to increase its rate over the 40-cent rate now in operation.

OKLAHOMA—*Perry*—The local gas company has lowered its gas rate 8 cents per thousand, bringing the rate down to 50 cents per thousand.

PENNSYLVANIA—*Greenville*—The local gas company has increased its rates from a schedule ranging from 35 cents to 55 cents per thousand to a schedule having a range of from 50 to 60 cents net.

WEST VIRGINIA—*St. Mary's*—The Baily Gas Company has been granted permission to increase its charges for gas. The new domestic rate is 30 cents per thousand; industrial rate, 31 cents for the first 500,000 and 26 cents per thousand for consumption over that amount.

INCORPORATED

COLORADO—*Denver*—A recently chartered organization is the Platte Valley Oil & Gas Company, capital $50,000. Incorporators: R. G. Campbell, W. A. McClintock and C. L. Lercher.

Trinidad—The Garcia Oil & Gas Company, capital stock $250,000, has been chartered. Those named as incorporators are Joseph Cox, Andrew Putaturo and B. M. Cawley.

Walsenburg—The Templeton Oil & Gas Company, capital $50,000, has been incorporated by H. C. Summers, D. B. Summers and C. L. Templeton.

MISSISSIPPI—*Magnolia*—The Mid-Central Oil & Gas Company, Inc., has been organized under the laws of the State of Louisiana, with a capital stock of $500,000. Officers of the new concern are: George F. Hodge, President; Dr. C. E. Wilkins, First Vice-President; E. D. Richards, Second Vice-President; J. T. Woodland, Third Vice-President; Gus Llambias, Secretary-Treasurer. These with Clem G. Hearsy and W. T. McGuire, compose the Board of Directors.

John Robira and Gus Llambias were elected Associate Attorneys; J. H. Price, Local Attorney; E. B. Richards, Drilling and Field Manager; J. T. Woodland, Manager of Leasing Department; C. E. Wilkins, Manager of Sales Department, and George H. Dodge and Clem G. Hearsey, Consulting Geologists. President Hodge was elected chairman of the Executive Committee.

WEST VIRGINIA—*Kenova*—The Duty Oil & Gas Company of this city has obtained a charter. The new concern is capitalized at $75,000. Those named as incorporators are: George W. Atkinson, J. E. Evans, H. A. Williams, W. W. Creasey, M. Riggs, Kenova.

Weston—The Norris & Cain Oil & Gas Company has been incorporated here with a capital stock of $150,000. Those named as incorporators are: T. M. Cain, S. J. Fucey, Ira Morris, S. K. Hazlett, W. N. Baker, all of Weston.

GENERAL

ARKANSAS—*El Dorado*—The Oil Operators Trust has drilled in a wild gasser, in this field, about eight miles north of El Dorado. It is said that the well is producing 50,000,000 cubic feet of gas per day, and that the pressure is so strong that the boiler and part of the drilling equipment has fallen into the crater which extends from 300 to 400 feet around the well, and which is 70 to 100 feet deep. The well is in section 8-16-15 on the Murphy lease, Union County.

The Natural Gas & Petroleum Corporation has a gasser of very large producing capacity on the Lovett lease in section 6-18-15, about five miles from the city.

In the northeastern section of the district, the Terry Fields Oil Company completed No. 4 Smith in section 20-17-14, with an estimated production of 15,000,000 cubic feet of gas and 75 barrels of oil at 2,208 feet.

CALIFORNIA—*Signal Hill*—The Western Star Petroleum Company, in an effort to clean and wash out its No. 1 well on the Robinson lease, was rewarded by securing a gasser said to have a production around 15,000,000 cubic feet of gas, as well as considerable oil.

ILLINOIS—Robinson—On the Jones property, a short distance from the city, the Wabash Gas Company has started drilling for gas.

KENTUCKY—*Hancock County*—Gibson and associates, it is reported, have a fair gasser in their No. 1 on the Stewart lease, at a depth of 492 feet. The well is also making some oil, it is said.

Martin County—It is reported that considerable drilling activity is noticeable in this county, and that the search for oil and gas promises to be productive of good results. This county is located near the Kentucky-West Virginia state line in the Big Sandy Valley.

Morgan County—The Petroleum Exploration Company has an 800,000-cubic foot gas well on the Elizabeth Amyes farm.

LOUISIANA—*De Soto*—The Pilgrim Oil Company is reported to have completed a small gasser in No. 2 on the Ramsey property, section 34-13-6, at a depth of 3,550 feet.

Haynesville—A gas line has been completed by the Haynesville Natural Gas Company from production in

ebster field to this city and gas service is now
le here

ner A gas pipe line connecting with the Ray-
well in Webster Parish is shortly to be constructed
ganization of a company to conduct the business
er way. H B Schofield, who is President of
nesville Natural Gas Company, will also be presi-
l the new concern

Charles No 1 on the Gray Syndicate lease
m by Marts McLean, is reported to have had
al production of 15,000,000 cubic feet of dry
The well was drilled to a depth of 4,000 feet

ee At the annual meeting of stockholders of
atural Gas Company, directors as follows were
S D Hunter, F N Florsheim, J H Trous-
ge Weaks, J D Pribble and Harry Briggs
hers elected are President, Samuel D Hunter,
President, J J Trousdale, Secretary, Henry
Treasurer, J D Pribble

chita Parish The Ouachita National Gas &
mpany is reported to have completed a good gasser
on 20 20 4, near Monroe

the Sandridge property, section 10 20 4, Morris
rs are reported to have completed a well esti-
to have a producing capacity of 20,000,000 cubic
a depth of 2,170 feet

ita Parish The Huber Carbon Company in No.
the Ray lease has 12,000,000 cubic feet of dry
a depth of 2 162 feet This location is in section
3

Southern Carbon Company is reported to have
ted a 13,000,000-cubic foot gasser on the Feem
his being the company's eighth well on the lease
ell is in section 13-19 4E, and came in at a
of 1 160 feet

er The Standard Oil Company has two
on the Bellevue field one with a capacity of
00 cubic feet, the other with a capacity of 2,
0 cubic feet Both wells may be drilled deeper
ease production

Reserve Natural Gas Company has completed
ach line from the Bethany gas field to this city,
e possible a greatly augmented natural gas sup
The line covers a distance of twenty-five miles
as constructed at a cost of $200,000 The addi-
gas supply secured is said to be around 70,000,000
feet per day, not all of which, however, is avail-
Shreveport Arkansas towns will also profit
completion of the line

Chickasha A plan is under consideration by
Oklahoma Gas Company to construct a storage holder
natural gas All gas available during the night when
mand is negligible is to be stored in the holder
distributed the next day in addition to the normal
available to take care of the peak loads

Guernsey County The Guernsey Oil and Gas Com-
pany, operating near Fairview, has brought in a good
gasser The well, it is estimated, will produce 250,000
cubic feet of gas and it may be drilled deeper to the oil
sand The pay was struck at a depth of 900 feet

Marietta At Jackson Ridge the Plainview Oil Com-
pany has completed its first well on the R Yost farm
and it is a good gasser in the Kenner sand, and pro-
duces as well some oil

Monroe County J E Carter and associates have a
gasser in a test on Whitten Creek estimated at 3,000,000
cubic feet The well was drilled to the Mason sand

Muskingum County In Brush Creek township, Frick
& Lindsey have a gasser in the Berea grit at No 1
on the Profit Sharing Oil Association lease

Sandusky Recent figures published by the Sandusky
Bulb Works of the General Electric Company show
a production of 75,000 electric light bulbs daily Nat-
ural gas and electric power in large quantities are pur-
chased from the Sandusky Gas & Electric Company for
use in their production

OKLAHOMA *Bartlesville* Employees of the Em-
pire Companies are being encouraged to form the
habit of saving by the liberal easy payment plan upon
which 8 per cent cumulative stock of the company can
be purchased Joseph L. Rosenmiller is director of
customer ownership for the company, and has charge
of the present selling campaign

Bristow A large gasser has been completed by the
Bristow Natural Gas Company in a location not far
south from the city The gas will be used to supply
local customers

Caddo County In a test west of the Cement field,
E W Kimbley has 2,000,000 cubic feet of gas at 3,290
feet on the Daniels farm, section 15 5 11 This well is
located in wildcat territory The well is being drilled
deeper

Chickasha The Oklahoma Gas & Electric Company
has completed arrangements for obtaining a supply of
natural gas from the Oklahoma Natural Gas Company
which in turn it proposes to distribute in this city

Okfuskee County Water Producers has completed a
fair gasser in No 2 on the Jefferson lease, section 13-
11 11, at a depth of 2,[illegible] feet

Oklahoma City At the last meeting of the season
held by the Oklahoma Gas & Electric Club, composed
of employes of the Oklahoma Gas & Electric Company,
officers were elected as follows J J Naylor, Presi-
dent, W J Brown, Vice President, and Hortense Lock,
Secretary Regular monthly meetings of the club will
be resumed in October

Okmulgee The M[illegible] Oil Company in No 1
the Randall lease, section 29 12 12, is reported shut in
with 1,500,000 cubic feet of gas at a depth of 1,[illegible] feet

Osage County—The Sand Springs Home Company in No. 2, section 22-21-8, reports a fair gas production from a depth of 2,246-2,310 feet.

Stephens County—The Magnolia Petroleum Company has shut in 7,000,000 cubic feet of gas in its No. 1 on the Wilson lease, section 17-2s-7w.

Ash Bros. in No. 1 on the McMahan property in section 18-1s-8k reports a production of 36,000,000 cubic feet from a depth of 1,814 feet.

A yield of 19,000,000 cubic feet is reported in the No. 1 of the Robertson and others well on the McMahan property, section 18-1s-8w.

Tulsa—Minshall and associates in their No. 3 on the Marshall tract, section 8-16-12, have completed a good gasser at a depth of 1,932 feet.

PENNSYLVANIA — *Greene County* — In Richhill Township, the Manufacturers Light & Heat Company has a gasser at a test on the J. K. and Elizabeth Scott farm.

In Springhill Township, the New Freeport Gas Company has a gasser in the salt sand at a test on the John Minor farm.

Somerset County—The Cumberland Oil Company is reported to have leased 30,000 acres in this county, upon which development work will shortly be undertaken.

SOUTH DAKOTA—*Dupree*—A successful drilling operation in this section has led to the leasing of considerable acreage, around Dupree, and drilling will be shortly put under way in several locations.

TEXAS—*Del Rio*—A good showing of oil and gas is reported in a well which was drilled for water on the Bedell-Moore estate. Other drilling operations, it is said, are being arranged for in the same section.

Eastland County—The Invincible Oil Corporation in No. 1 on the Nelson tract, has a large quantity of gas, as well as 100 barrels of oil, it is reported.

Itasca—The Lone Star Gas Company having secured guarantee of a sufficient number of consumers, has agreed to extend its service to this town.

Mexia—L. K. Hughes and associates in their No. 1 on the McGraw tract in the Wortham district came in with 30,000,000 cubic feet of gas, and later started spraying oil, the volume of which is now reported to be 1,600 barrels per day.

Palo Pinto County—The Nelson Oil Syndicate in No. 2 on the French lease has a showing for 2,000,000 cubic feet of gas at 530 feet. This is in wildcat territory.

Rains County—The Texas & Pacific Coal & Oil Company, it is said, has a heavy gas showing in its No. 1 test on the Humphreys lease, near Lone Oak. The gas began to show at a depth of 2,800 feet.

San Antonio—A gas pipe line has been contracted for by the Grubstake Investment Company with the Hope Engineering & Construction Company of Mount Vernon, Ohio, to extend from this city to a gas field in McMullen County. The line will cover a distance of ninety miles, and is to be completed by November 1st.

Stephens County—Gohlson and associates in No. 1 on the Gohlson lease reported 6,000,000 cubic feet of gas at 7,465 feet.

The Pay-Tex Oil Company in No. 3 on the Lane lease was making 2,000,000 cubic feet of gas and some oil at 3,000 feet.

Young County—The North American Oil & Refining Company is reported to have large gas production in its No. 2 on the Melgard lease, as well as 150 barrels of oil.

Young County—The North American Oil & Refining Company has a good gasser in No. 5 on the Scott tract, a location about half a mile south of South Bend. The well is reported to be making around 500 barrels of oil also at the same depth, 3,921 feet. The well will be shot, it is said.

WEST VIRGINIA—*Boone County*—A total of 2,000,000 cubic feet of gas is the reported production from the Big Lime from the No. 1 well on the John L. Nestar farm in Paytona district, which was drilled by the Owens Bottle Company.

Brayton County—The West Virginia Central Gas Company reports the completion of the No. 3 well on the C. L. Engle farm in Otter district. The well was drilled 2,090 feet and is producing at the rate of 879,000 feet of gas.

Calhoun County—A gas test showed 40,000 cubic feet of gas in the No. 1 well on the county school lot in Sheridan district. The well was drilled 1,532 feet to the second salt sand.

The Chemical Oil & Gas Company, it is reported, has 700,000 cubic feet in its well in Center district, at a depth of 2,085 feet.

Located in Sheridan district, Thomas Crowley has a Big Injun sand gasser at his test on the Samuel Summers farm.

Martin Crowley reports the completion of the No. 1 well on the J. A. and M. Buck farm, Sheridan district, after drilling 2,172 feet. The well is producing 168,000 cubic feet of gas.

Cumberland—The Cumberland Oil Company, Inc., has completed its fourth well in Salt Lick District, and reports a production of 500,000 cubic feet of gas.

Doddridge County—In Central district, the Philadelphia Oil Company drilled its old No. 1 on the J. W. Ellifritt farm which was a gasser in the Maxon sand, through to the Big Injun sand, giving it a shot.

On Cabin Run in Central district, the Carnegie Natural Gas Company's second test on the W. S. Ross heirs' farm is a Big Injun gasser.

The habits you form count for more than the resolutions you make, because habit is a living resolution

[illegible] County. On Stone Lick Run of Horn Creek, [illegible] the Hope Construction & Refining Com[illegible] Zeta O. Lively is a gasser in the Berea [illegible]

[illegible] County. One mile east of Wolf Summit, [illegible] the Reserve Gas Company has drilled its [illegible] a gasser on the Virginia Thompson farm to [illegible] sand and has a showing for a light [illegible]

[illegible] township the Hope Natural Gas Company's [illegible] John L. Strothers farm is a gasser in the Big [illegible]

[illegible] County. A production estimated at 1,000 [illegible] feet of gas is reported from G. L. Calmes [illegible] 12 on the Huntington Land and Development [illegible] in Cabin Creek district. The gas is being [illegible] from the Weir sand.

[illegible] waters of Watkins Creek, Cabin Creek district, [illegible] Owens Bottle and Machine Company has [illegible] the No. 6 Black Diamond Coal and Coke [illegible] well in the Weir sand and have a gasser for [illegible]

[illegible] County. In the Collins Settlement [illegible] test on the Doolan farm is a gasser in the [illegible] sand.

[illegible] County. In Carroll district, the Superior Oil [illegible] Company's test on the James W. Moore farm [illegible]

[illegible] Gas and Oil Company reports the com[illegible] the No. 1 well on the W. [illegible] Talbot farm [illegible] was drilled [illegible] feet and it is now producing [illegible] feet.

[illegible] has completed the No. 2 well on the W. [illegible] farm, Carroll district, which, on test, showed [illegible] feet of gas.

[illegible] County. In Mannington district, R. S. Mor[illegible] on the M. M. Messenger is dry in all the [illegible]

[illegible] County. In Clay district the South Penn[illegible] Company's No. 4 on the Asa Lemley farm is a [illegible] the fifth sand.

[illegible] County. In Lafayette district the Ameri[illegible] Development Company has completed a well [illegible] on the Samuel Romgardner farm. It is a gas[illegible] in the Marcellus sand for 700,000 cubic feet a d[illegible]

Wetzel County. In Center district the Manufacturers Light & Heat Company has a Gordon sand gasser at a test on the [illegible] M. V. Snider farm.

WYOMING County. The Producers & Refiners Corporation it is reported will construct near this city a gasoline compressor plant of large capacity. The Hope Engineering Company has in hand the contract for the work.

SOUTH AMERICA. [illegible] The Latin American Petroleum Company is reported to have completed two gas wells [illegible] Columbia. The wells are located in [illegible]

PUBLISHED BY THE PERIODICAL [illegible] MT. ST. [illegible]

WALKING and WAITING

AS long as it is a fact, according to actual statistics gleaned by the Winchester Repeating Arms Company, the Dennison Manufacturing Company, and other like institutions, that 75 per cent of the average salesman's time is spent in the non-productive work of "walking and waiting," it is a great pity that business men should not endeavor to cut down as far as possible the "waiting" waste-element, and it would seem that in these days of "jitneys" salesmen could ride at far less cost than to walk.

Time-study has been the means of discovering that about 10 per cent of the ordinary salesman's time is spent in clerical work; 15 per cent in actual selling, and, as we have said, 75 per cent in "walking and waiting." *"The Shield,"* discussing this same subject, says, "Sales engineers are justified in devoting much thought to the better planning of salesman's schedules." Let us add to this thought that advertising would also seem to be a direct answer in quite liberal measure to this problem of eliminating waste-time.

There is no "walking and waiting" when it comes to the advertisement; it is not a means of making one call and then another, and thereafter still another, until perhaps two, three, or perhaps four calls a day are made, before going on to the next town, but it reaches many hundreds of buyers at one and the same time, almost simultaneously, and it reaches buyers *behind the scenes,* as it were. The business man at his desk has moments to spare; it may be a period just prior to his morning mail; another, possibly a little later in the morning; still another on returning from lunch, and sometimes a little period along toward the closing hour of the afternoon. These are the times when the busy business-man as a means of recreation, as well as of posting himself on the new things, improvements, etc., brought out in the trade, picks up his trade-magazine, and while undisturbed, and with his attention undivided he reads the messages of manufacturers found in the advertising pages, as well as noting the editorial matter and news.

A double-page-spread with plenty of room in which to tell the story and deliver the message, and likewise to illustrate the articles discussed, would cost the manufacturer but a mere pittance as compared with the tremendous loss of time that, as *"The Shield"* says, results from several no-order calls which a salesman has to make in many instances before he can close with a prospective customer.

Liberal trade magazine advertising and excellent sales ability on the part of representatives make a splendid combination, neither one without the other should be attempted. Introduce your concern, keep your concern before the trade constantly. Tell of the features you are offering, re-tell their merits. Keep your concern and manufactures ever in the buyer's mind through trade magazine advertising, thus when your representatives call upon the trade East, West, North and South the merits of your concern and of your manufactures are live topics. Advertising is a short-cut to short, productive salesmen's visits.

Lucius S. Bigelow

THE NATURAL

GAS INDUSTRY

TRANSPORTATION GASOLINE PRODUCTION DISTRIBUTION

SUBSCRIPTION— $3.00 IN THE U. S.

VOLUME 16 THIS NUMBER 8

CONTENTS FOR AUGUST, 1922

PUBLISHER'S NOTICE

PUBLISHED MONTHLY

Advertising copy should be in by the [illegible] month previous to issue

SUBSCRIPTION RATES In the United States [illegible]

ADVERTISING RATES on request

CORRESPONDENCE IS SOLICITED from all those interested in Natural Gas and kindred industries

Buffalo Long Distance (Bay) Bell Telephone [illegible]

Cable Address Publight Buffalo

Address General Correspondence, Editorial and Advertising Matter to Central Office

PUBLISHED BY

PERIODICALS PUBLISHING CO.

BUFFALO, N. Y.

[illegible] S. Brisbane President and Editor

Hoxie S. Brisbane, Vice President

A. Cecil Brisbane, Secretary

Entered as second class matter December [illegible] at the Post Office at Buffalo, New York, under the act of March 3, 1879

CONTENTS OF THIS ISSUE

INDEX OF PAST 1922 ISSUES

MEMBERS OF ASSOCIATION OF NATURAL GAS SUPPLY MEN

ASSOCIATION OFFICES

905 Oliver Building, Pittsburgh, Pa

DIRECTORS

FRED A. MILLER	F. R. HUTCHINSON
T. C. CLIFFORD	A. W. THOMPSON
L. A. ADAMS	WM. PATTERSON
O. F. FELIX	R. A. McKINNEY
W. B. GLOVER	F. W. MINER
WM. B. WAY	L. P. SUTTER
E. S. ROONEY	GEO. D. ROPER
WM. McKEE	HUGH TRIMBLE

Acme Fishing Tool Company, Parkersburg, West Va.
Ajax Iron Works, Corry, Pa.
American Atmos Corporation, Pittsburgh.
American Foundry Construction Co., Pittsburgh, Pa.
American Heater Corp., St. Louis.
Anchor Packing Co., Pittsburgh

Bailey Meter Co., Cleveland.
Baltimore Gas Appliance & Mfg. Co., Baltimore.

e, Okla.

City, Pa.
lle, Okla.

lford, Pa

Pa.
a.

. Louis.
and.

Chaplin-Fulton Mfg. Co., Pittsburgh.
Chapman Valve Mfg. Co., Tulsa, Okla.
Clark Bros. Co., Olean, N. Y.
Clark Co., Div., Geo. M., Chicago.
Cleveland Gas Meter Co., Cleveland.
Colona Mfg. Co., Pittsburgh
Colonial Supply Co., Pittsburgh.
Columbia Gas Stove Co., Huntington, W. Va.
Columbian Rope Co., Auburn, N. Y.
Continental Supply Co., St. Louis.
Cooper, C. & G. Co., Mt. Vernon, O.
Wm. M. Crane Co., New York.
Cutler Hammer Mfg. Co., The, Milwaukee

Dayton Pipe Coupling Co., Dayton.
Davison, N. C., Gas Burner & Weld'g Co., Pittsburgh
Deck Tank Co., Okmulgee, Okla.
Doherty & Co., Henry L., New York.
Dresser, S. R., Mfg. Co., Bradford, Pa.
Duquesne Burner Service Co., Pittsburgh

Economy Stove Co., Cleveland, O.
Economy Burner & Engineering Co., Pittsburgh
Equitable Meter Co., Pittsburgh
Estate Stove Co., Hamilton, O.

Fenwick Reddaway Mfg. Co., Newark, N. J.
Fitler, Edwin H., Co., Philadelphia, Pa.
Foxboro Co., The, Foxboro, Mass.

Frick & Lindsay Co., Pittsburgh.

Garlock Packing Co., Palmyra, N. Y.
Gas Appliance Co., Cleveland.
Gas Engineering & Const. Co., Pittsburgh.
General Gas Light Co., Kalamazoo.
Germer Stove Co., Erie.
Gilfillan Machine Works, Ebenezer, N. Y.
Goodrich, B. F. Co., Akron, O.
J. H. Grayson Mfg. Co., Athens, Ohio.
Grinnell Co., Providence, R. I.
Guiberson Corporation, Dallas, Tex.

Hammon Coupler Co., Pittsburgh.
Hays Mfg. Co., Erie.
Hart Mfg. Co., Cleveland.
Hazard Mfg. Co., Chicago.
Heeter, C. M. Sons & Co., Inc., Butler, Pa.
Hewitt Rubber Co., Pittsburgh
Hoffman Heater Co., Lorain, O.
Hope Engineering & Supply Co., Pittsburgh
James Howden Co. of America, Wellsville, N. Y.
Humphrey Company, Kalamazoo, Mich.

Imperial Belting Co., Chicago, Ill.
Ingersoll-Rand Co., Pittsburgh.
International Derrick & Equipment Co., Columbus.

Jarecki Mfg. Co., Erie.
Jones & Laughlin Steel Co., Pittsburg, Pa.
S. M. Jones Co., Toledo.

Kisselman & Co., Parkersburg, West Va.
Kontz & Stroehman, Parkersburg, W. Va.
Koppers Co., Pittsburgh, Pa.

Larco Wrench & Mfg. Co., Chicago.
Lattimer-Stevens Co., Columbus, O.
Leschen, A. & Sons Rope Co., St. Louis.
Lucey Mfg. Corp., Pittsburgh.
Ludlow Valve Mfg. Co., Pittsburgh
Lunkenheimer Company, Cincinnati, Ohio.

MacWhyte Co., Pittsburgh.
Manhattan Rubber Mfg. Co., Passaic, N. J.
McKam, J. D., Fishing Tool Co., Parkersburg, W. Va.
Metric Metal Works, Erie.
Minneapolis Heat Reg. Co., Minneapolis.
Moon Mfg. Co., The, Chicago.
Moore, Lee C. & Co., Inc., Pittsburgh.
Moser Mfg. Co., Kane, Pa.
Mueller H. Mfg. Co., Decatur, Ill.

National Supply Co., Pittsburgh.
National Transit Pump & Mach. Co., Oil City, Pa.
National Tube Co., Pittsburgh.
Natural Gas Industry, Buffalo.
New Bedford Cordage Co., New York City.
New York Belt'g & Pack'g Co., New York.
"1900" Washer Co., Binghamton, N. Y.
Northrup Equipment Co., Parkersburg, West Va.

Ohio State Stove Co., Columbus, O.
Oil & Gas Journal, Tulsa, Okla.
Oil City Boiler Wks., Oil City, Pa.
Oil Trade Journal, New York.

Oil Well Supply Co., Pittsburgh.
Oxweld Acetylene Co., Chicago.

Parkersburg Mach. Co., Parkersburg, W. Va.
Parkersburg Rig & Reel Co., Parkersburg, W. Va.
Peerless Heater Co., Pittsburgh.
Pennsylvania Furnace & Stove Co., Warren, Pa.
Petroleum Publishing Co., Tulsa, Okla.
Petroleum Supply Co., Steubenville, O.
Pittsburgh Meter Co., East Pittsburgh.
Pittsburgh Reinforced Brazing & Mach. Co., Pittsburgh.
Pittsburgh Supply Co., Pittsburgh.
Pittsburgh Valve & Fittings Co., Pittsburgh.
Pittsburgh Valve, F'd'y & Const. Co., Pittsburgh.
Pittsburgh Water Heater Co., Pittsburgh, Pa.
Plymouth Cordage Co., N. Plymouth, Mass.
Pratt & Cady Co., Inc., Hartford, Conn.
Precision Instrument Co., Newark, N. J.
Prichard Supply Co., Mannington, W. Va.

Rathbone, Sard & Co., Aurora, Ill.
Rathbun-Jones Eng. Co., Toledo.
Reid, Jos., Gas Engine Co., Oil City, Pa.
Rensselaer Valve Co., Pittsburgh, Pa.
Reliable Stove Co., Cleveland.
Republic Iron & Steel Co., Youngstown, O.
Republic Rubber Co., Youngstown, Ohio.
Republic Supply Co., Houston, Tex.
Rezner Mfg. Co., Mercer, Pa.
Riesenman Mfg. Co., Ltd., Franklin, Pa.
Robbins Publ. Co., New York.
Robinson Packer Co., Tulsa, Okla.
Roebling, John A. Sons Co., Trenton, N. J.
Geo. D. Roper Corp., Rockford, Ill.
Rossendale-Reddaway Belt'g & Hose Co., Newark, N. J.
Ruud Mfg. Co., Pittsburgh.

Tens.

L.

Taylor, W. P. Co., Buffalo.
Toledo Pipe Thr'd'g Mach. Co., Toledo, O.

Union Rubber & Asbestos Co., Trenton, N. J.
United Seal Co., Columbus.
Upson-Walton Co., Cleveland, O.
U. S. Rubber Co., New York.

Walker & Pratt Mfg. Co., Boston, Mass.
Welsbach Co., Gloucester City, N. J.
Westcott Valve Co., Seneca Falls, N. Y.
Westinghouse Elec. & Mfg. Co., Pittsburgh.
Wheeling Steel Products Co., Wheeling, W. Va.
Williams Tool Co., Erie.
Witman & Co., Columbus.
Williamsport Wire Rope Co., Williamsport, Pa.
Worthington Pump & Mach. Corp., Buffalo.

Yorke Derrick Co., Washington, Pa.
Youngstown Sheet & Tube Co., Youngstown, O.
Young, Wm. T. Drilling Eng. Co., Oil City.

FROM THE EDITORIAL MAIL BAG

CTORS OF SUPPLY MEN'S ASSOCIATION

H board of directors of the Association of Natu ral Gas Supply Men met recently at the Head quarters of the Natural Gas Association at Pittsburgh and elected officers as follows nt, Fred A Miller of the S R Dresser Mfg Com Bradford (re elected), Vice President, Otto Felix Equitable Meter Company, Pittsburgh, Treasurer, Bidford of the Pittsburgh Meter Company, East rgh (re elected), Secretary, Wm B Way, Pitts re elected)

atter that was much discussed was the incorpora the Association of Natural Gas Supply Men nt Miller advanced the opinion that if the associa re incorporated, its usefulness to the Natural Gas tion would be increased

finances of the association are in excellent condi nd the financial report shows a balance of $5,000 redit of the association

committee was appointed whose duty it will be to ate the condition of the association and make sug s for betterment, and to examine closely into the ntage of amending the Constitution and By-Laws

directors present at the meeting were Fred A S R Dresser Mfg Co, Bradford, Pa, Wm Pat Frick & Lindsay Co, Pittsburgh, Pa, Wm Mc Naghin Fulton Mfg Co, Pittsburgh, Pa, L P Mark Mfg Co, Pittsburgh, Pa, E S Rooney, Brown Sheet & Tube Co, Pittsburgh, Pa, W B Oil Well Supply Co, Pittsburgh, Pa, R A Mc Manhattan Rubber Co, Pittsburgh, Pa; Hugh r, National Supply Co, Pittsburgh, Pa, Otto Equitable Meter Co, Pittsburgh Pa, and Wm B Natural Gas Association of America, Pittsburgh.

luncheon followed the meeting

LL SEEK TO REDUCE TRANSMISSION LOSSES

H Bureau of Mines has asked the cooperation of gas companies in obtaining data on transmis sion losses of natural gas to the end that some means may be found and carried out looking to gener of some method of conservation The is asking the companies for data on their sub losses

the purpose of the Bureau to prepare a new man dling with the use of natural gas in the home, and forth the necessity for conservation R A Cat ural Gas Engineer is engaged on this work in ation with the Natural Gas Association

WEST VIRGINIA ASSOCIATION TO MEET

ANNOUNCEMENT is made that the Sixth Annual Convention of the West Virginia Oil and Natural Gas Association will take place at Clarksburg, West Virginia, August 26th and 27th and 28th The first two days of the meeting will be occupied with business sessions while Saturday the 28th, will be pleasantly devoted to a basket picnic for all oil and gas men and their families Clarksburg has a number of good hotels, and the suggestion is made that reservations should be made immediately

The association last year deemed it wise on account of conditions to omit its annual convention and all indica tions are that last year's omission will be more than made up by the attendance at this year's meeting

Matters pertaining to the coming event are in the capa ble hands of Edwin Robinson, Secretary-Treasurer of the West Virginia organization

MEETING OF NATURAL GAS ASSOCIATION BOARD

A meeting of the Board of Directors of the Natural Gas Association of America took place recently in Pittsburgh with the following members of the directorate in attendance

J D Creveling, President, F L Chase M W Walsh, John B Corrin, J W Dana, E P Whitcomb, L K Langdon, John B Jenkins, L B Denning H J Hoover, and Wm B Way, General Secretary

H C Morris, T J Jones H A Wallace, K C Kruch, and M B Daly sent word that they would be unable to attend on account of other business engagements

H Foster Bain, Director of the Bureau of Mines has been elected honorary member of the Association Mr Bain was in Alaska at the time and the communication informing him of his election was forwarded to him there by Acting Director Holbrook

The Board voted to contribute $500 as the association's quota toward the erection of a building for the Chamber of Commerce of the United States in Washington, D C

The motion picture entitled "The Story of Natural Gas" shown at Kansas City Convention has been approved by the U S Bureau of Mines and will now be made a part of the educational campaign to be conducted by the association Natural Gas returning to be printed by the Publicity Committee will be employed in carrying out this plan

A membership drive was planned and matters of procedure discussed

Natural Gasoline Meeting

Natural Gasoline Manufacturers Association, Grown Strong in Its Short Existence is a Great Help to Those in the Gasoline Production End of the Industry

THE Natural Gasoline Manufacturers' Association recently held its first annual convention in Tulsa. It was an unqualified success. Delegates from the Mid-Continent section to the number of 130 attended. The entire two days' program consisted of reports of the various committees of the Association, which reviewed the work of the organization during the past year, the first of its existence.

Following the reading of the reports which were approved, interesting discussion was indulged in. The outage problem, the Saybolt case, specifications, tank car improvements and Interstate Commerce Commission's regulations were considered in all their phases and it was the sense of the convention that much benefit had accrued to the natural gasoline industry through the activity of the Association and its work was warmly commended.

Following the reading of the reports, officers and directors were elected as follows: W. M. Welch, Tidal Refining Company, President; D. E. Buchanan, Chestnut & Smith Corporation, Vice-President; O. W. Crick, Highway Oil & Refining Co., Treasurer, who, together with W. L. Walker, Liquefied Petroleum Gas Company; R. R. Owens, Marland Refining Company; R. P. Humes, Transcontinental Oil Company; A. M. Jones, Amity Gasoline Company; A. J. Schlosser, Barnsdall Oil Company; B. E. Bush, Diamond Refining Company; C. R. Burke, Oklahoma Natural Gas Company; W. E. Burk, Highway Oil & Refining Co.; H. R. Johnson, Akin Gasoline Company; Emby Kaye, Skelly Oil Company; O. L. Cordell, Phillips Hi-Grade Refining Company; F. L. Chase, Lone Star Gas Company, and C. W. Mullalley, Arkansas Natural Gas Company, form the executive

The convention closed with a banquet at the Hotel Tulsa, at which D. E. Buchanan was toastmaster and R. P. Brewer, chairman of the Board of Exchange National Bank at Tulsa was the principal speaker.

President W. M. Welch presented the following, which was his presidential address for the year 1922:

President's Address

Our Association was organized a year ago. It was conceived in necessity, born in adversity, and struggled through trials and tribulations until now, strong and healthy, it is ready for even greater usefulness than that which has marked the first year of its life.

We organized in a period of great depression in the natural gasoline industry. In various quarters doubt was expressed as to the ability, under the circumstances, of natural gasoline manufacturers to maintain an association.

It was said that if we organized at all, we should affiliate with the association of some other branch of petroleum industry. Our answer was—"We will not affiliate, but we will co-operate."

Our attitude was that our problems were peculiar to ourselves, and were neither appreciated nor understood by any persons but ourselves. On the other hand, we realized that the manufacture and use of natural gasoline has a great deal in common with the production and refining of petroleum. We, therefore, desired to co-operate, and have earnestly endeavored to do so. For instance, we have been working in the closest contact and the most complete accord with the American Petroleum Institute, which is taking the lead, and is rendering invaluable service, in working out the many general problems of the petroleum industry. Details of our co-operation with the Institute and with other important bodies will be mentioned a little later.

When we began, we laid down a policy, combining the strictest economy with intensive work, concentrated upon our own special and vital problems. There was urgent need of an Association because our industry had very rapidly become important. As an illustration to this, I may point out the fact that Mid-Continent natural gasoline manufacturers are paying to oil producers approximately $45,000 a day for casinghead gas, which, before the development of our business, was virtually a wasted product.

Our industry can be said to be founded and developed upon conservatism. Until recovered by natural gasoline manufacturers and put to a useful purpose, the gasoline content of the gas coming from oil wells was lost, completely and absolutely lost. Today the value of natural gasoline saved annually approximates or exceeds seventy-five million dollars. This is true and practical conservation.

Many millions of dollars have been invested in Mid-Continent gasoline plants. But important as the industry is, and was when we began our work a year ago, the conditions in it then were to a considerable extent chaotic. This was due in some degree to the general

Adopt this: Think before you act—but don't think too long.

form distillation curve; thereby giving the motor more active power, improving starting and acceleration, saving the battery, greatly reducing carbon deposits, and, in general, increasing the satisfaction and economy of operating an automobile.

The important matter of safety in transporting gasoline has been handled in close co-operation with the American Petroleum Institute, the Bureau of Explosives, and the Bureau of Mines. The very effective work of the latter in this connection has been directly due to the activity of our Association. The issues raised by the Bureau of Explosives have been met in a constructive way. If no other accomplishment could be credited to the Association, the results we have been largely instrumental in securing in the matter of transportation regulations would have fully justified the time and money we spent.

The Bureau of Mines has requested that we publish in the above connection the joint report of our Association and the Bureau of Mines as an accomplishment of constructive value. A press notice issued by the Bureau of Mines under date of Jan. 4, 1922, says in part, "This association proposed specifications for the manufacture and marketing of natural gas gasoline, the adoption of which has insured a uniform and satisfactory product. The adoption of these specifications was also a distinct benefit to the smaller producer, for it put his product on the same basis as that of the larger producer. By the progressive step thus taken the industry is in a fair way to be again set on a firm basis."

The American Petroleum Institute will have a conference in New York on "Fire Protection Regulations and Reduction of Hazards to Life and Property," and through the local members of its Board of Directors, a committee of delegates to that conference has been selected. This committee of three members will represent respectively The Western Petroleum Refiners Association, the Mid-Continent Oil and Gas Association, and the Association of Natural Gasoline Manufacturers. Very beneficial constructive work in the interest of the whole industry can be expected from this conference.

Other activities have had to do with increasing the efficiency and reducing the costs of gasoline plant operation. Inspection trips have been made and plant design and operation have been freely discussed.

In the matter of the purchase of gas for plants, the Association played a leading part in obtaining the elimination by the Department of the Interior of the objectionable Chicago tank wagon price factor in settling for gas from Indian lands. When the Department insisted upon this factor, it established a precedent which proved oppressive. Its abolishment put gas payments on a much sounder and fairer basis.

You will have reports from our Secretary and a number of our committees. Their work is being done with energy, interest and intelligence. The members of these committees are specialists, and the reports represent the best ability and thought of the industry in their respective fields. This ability and thought is bringing results beneficial not only to the natural gasoline industry, but to all who make, transport or market motor fuel. We still have many problems before us. Our work will never be finished. When we make an advance we must hold it. No branch of the petroleum industry at this time stands in a better relative position than our own, and we propose to maintain this position. We can do so with advantage to ourselves and with advantage to the other branches of the petroleum industry. The natural gasoline manufacturer adds to the value of oil producing properties by adding to their revenue. He aids the refiner by enabling him to put more of his product into motor fuel. He helps the distributor by assisting in making a better product. He benefits the immense army of automobile owners.

In the name of and for our membership, I wish to express their appreciation of the services of the men who have made this year's first work so successful. I want to give credit to Mr. Bourque for the able way in which he has done his work, and the members themselves I want to congratulate upon the spirit of fair-mindedness with which they have approached their problems. To all, I wish to offer gratefully my thanks for the most kindly spirit of friendliness which has been shown towards the efforts, in the interest of the Association, of its First President.

We want every natural gasoline manufacturer in the country, in West Virginia, Pennsylvania, Ohio, California, and Wyoming, as well as those in the Mid-Continent field, to join this Association. We need them, but they need us more. They are all fair men, and we are sure they do not wish to reap the benefits of our work without contributing to its cost. An unprecedented era of sound, stable and permanent prosperity for natural gasoline manufacturers is approaching. Let us make the most of its opportunities.

Secretary A. V. Bourque presented a very interesting address. He told of things accomplished by the Association, of what the Bureau of Mines had requested, and announced that now that the association has held its initial convention which was a marked success, it is high time to go into the field actively soliciting association memberships.

It will be remembered that this association finds its field that of the recovery of gasoline from natural gas

LOUISVILLE COMPANY ISSUES BOOKLET

A very interesting booklet has been issued by H. M. Byllesby & Company upon the occasion of the eighty-third anniversary of the Louisville Gas & Electric Company, showing the progress and growth of the company through these many years. The book is handsomely printed, and illustrated with many photographic reproductions of the company's plants, as well as a number of charts and maps outlining territory served and progress made.

The only way to quickly find success without working for it, is to look it up in the dictionary

Spirit of Public Service

The Fundamental Factors of Public Relations Rest to a Large Extent Upon Education of Employees

BY [illegible] HANNA

[illegible]

BILITY to render satisfactory service to customers is largely the result of employee ignorance of the fundamental factors of relationship which should exist between the utility and

> Employees in a general way should possess not only a likeable personality but should down deep in their hearts have a broad sympathy and understanding of human nature in general
>
> The management of any utility is responsible to a marked degree for the proper education of their employees certainly no more profitable or important investment could be taken under advisement than this subject which would bring about a more kindly understanding between customer and corporation

[illegible]

mate's a great many employees and corporations have come to believe that with the payment of stated salary or wage each week or month relations cease. This is a line of least resistance in both employer and employee cases fall, due [illegible] of competition found in many other lines.

[illegible] statements are offered in a spirit of constructive criticism of present day operation. It seems necessary at this point in order to bring forcibly to mind [illegible] and a possible remedy.

As the success of a utility is largely dependent upon [illegible] tangible item of good will it behooves [illegible] to develop a plan of education [illegible] into the minds and hearts of the employees for the rights and possible varying [illegible] of the customer so that we may be able to [illegible] our assets in respect and good will.

This plan of education should embody ways and means assuring the customer of the every day willingness of employees to do everything within reason to serve them. This thought is without doubt the true basis on which to build a practical course of instruction.

Employees should be taught that it is quite natural with the human race to complain. They must not only be prepared to meet with various phases of it every day but must devise ways and means to cope with it satisfactorily and above all pleasantly.

Too many employees fail to appreciate the rights of the customer. A complaint no matter of what nature should serve as an opportunity to make a friend. Simple lessons in the art of adjusting little differences, an art which has reached a high state of efficiency in large mercantile and other business institutions, could be devised and profitably applied in the natural gas business as well as all other utility operations.

A thorough knowledge of every phase of operation would be a good starting point for any local natural gas distributing organization. A series of meetings might be inaugurated in which the operating employees and other personnel would be thrown together in a meeting thoroughly cooperative in character and spirit. To make this series of meetings both interesting and instructive a definite program would have to be arranged in advance to insure intelligent arrangement and produce maximum results.

Certain employees in each department should be selected and notified in advance of the part they are to take in the next meeting, asked to prepare a paper on a given subject and after the paper is completed it should be submitted to the management for [illegible] to insure that its contents are both constructive and fundamental in character.

This policy of getting employees together will accomplish many things, such as:

1. Bring each member of the organization into a relationship of cooperation.
2. Build a basis of [illegible] with the organization which would [illegible] a knowledge of the successful operation of the business.
3. Make each familiar with various phases of operation thereby enabling them to appreciate each other's problems.
4. Enable the management to [illegible] those who are earnestly striving [illegible] and those who are not or those who are temperamentally unfitted [illegible]

find a short road to success would make good epitaphs for the vast multitudes of failures

meet the only source of revenue (the customer) day after day.

One employee in a utility organization is no better than another—the duties may be different, but the obligation of each is identical.

No employee of a utility can be a success or an asset unless his mental attitude is right—and we are more or less responsible for this.

The money for product, material, salary and wages comes from the public whom they serve, rather than from the corporation itself. Quality of service, promotion of friendships and absence of friction should form the basis for employee advancement in every utility organization.

Any employee who displays an unwillingness to line up and gain added knowledge of the business, then and there becomes a liability. If knowledge is power—and it certainly is in the utility business—they are shortsightedly turning down an opportunity to raise their earning power.

The man who reads the meters should receive the same consideration as the office employee. Their ability and willingness to learn to appreciate each others work is the key to a more perfect service to the customer.

Employees with socialistic tendencies—those who are out of sympathy with the world in general—those who openly or privately criticise the policy of the company, except to the management—those who imagine there is a wide gulf between customer and corporation, should either be taught the opposite or asked to seek employment of some other nature, because they represent a liability rather than an asset to the utility from whom they draw pay.

If there were as many gas companies in a town or city as banks or mercantile establishments, the service of necessity would be more near 100%, and the worries which we are called upon to endure would be eliminated. This situation being true, opens the way to successful methods of raising standards of service.

Natural gas companies, because of the very nature of their commodity—its production, purchase and transportation, with the ever-changing sources of supply which necessitates a corresponding change in rates and methods of service, are up against the eternal task of promoting good will.

The cycles of time (and they are short cycles, too) bring about the need of intelligent, responsible friendships—friends who can appreciate to some degree the problems which confront every utility engaged in the natural gas business.

Courtesy and kindness will make many friends in times of peace—and that's the time to make them. Not when the day of reckoning arrives and an impromptu campaign of customer education is launched for the sole purpose of gaining, if possible, a measure of good will in an effort to stifle opposition to change in rates or franchise extensions.

Service is head and shoulders above any other phase of the natural gas industry, good-will, a spirit of fair play and absence of pernicious opposition follows a consistent policy of conscientious educational service.

Every courtesy—every kind word—every interest which employees, both in the office and outside, can bring into their association with customers, is a measure of protection—an insurance policy from year to year against adverse situations which hamper both operation and earnings.

PUBLICITY

Much money is appropriated for general advertising and publicity (usually upon the advice of an advertising expert) and passed by the management of the utility.

This expert may or may not be familiar with the intricate problem of promoting good will among the customers of the utility.

Too often, in my opinion, this publicity takes the form of reproductions of balance sheets—number of stockholders and other technical and profound subjects, which, if the masses (who actually compose 90% of our customers) could be induced to read, would leave them more or less in the dark as to what it was all about.

A portion of this money, which is now being expended in publicity channels, might be profitably diverted and used to provide this course of instruction for office and operating personnel.

In fact, it is quite necessary to organize within the organization a sympathy and understanding, and upon this the publicity campaign should be carefully built.

You can readily appreciate how ill-timed and fruitless an advertising campaign must be when the rank and file of the organization is not thoroughly familiar with every phase of the idea and ideals which it is designed to accomplish.

All advertising should be arranged to reflect the high ideals and purposes of the organization from meter reader to president. This advertising could be profitably used to educate the rank and file of employees and spur them on to a bigger and broader service effort.

So I say why not take a large portion of the money which has been going into publicity channels and expend it upon the floor of our offices in providing courtesy and education to customers who call on us at least once a month.

Teach the employees at the various windows and counters in our offices something about the advantages which will accure through their ability to cultivate the customer.

Teach the meter reader, the complaint man, the salesman—even the men back in the field—the golden rule of service, which is, after all, the simple art of being nice to every man with whom they come in contact.

Many a man who punches a time clock lives to wear a full jewelled chronometer

thousand ways the value of service can be brought attention of the employee the employee soon how compensating and satisfying his work be and how valuable it is to his employer and this rates his own work from day to day

Every manager or someone responsible for the convenience and comfort of the customer, should ever be at elbow to help and direct them while they are in the

department stores years ago learned the need of this therefore they have developed a class of men to particular work in fact they have made of it a science. Department stores found that the public are timid they need a smile and a word kindly they spend more money and are better satisfied they feel at home

A manager's office might be so located that it would a step from the receiving teller's window to a comfortable chair opposite him and all disputes and complaints ironed out, and the customer sent away happy of this kindly consideration from the manager

The fact that so few people are in any degree familiar the problem of natural gas utility operation makes a fertile field for educational work

Practical demonstrations of various phases of service

Save money and time

Save safety

Secure comfort

These subjects tend to bridge the gap between and customer Not only does it narrow the gap the desire of the lay person for additional and could profitably become a year round with every natural gas utility

Personally contact is so valuable and far reaching any other course seems deliber earnings but a golden opportunity capitalize the priceless good will which is more in every community

Every employee of every gas office should be subject analysis minute five per cent of our customers are folks who are small wage earners Their an eternal care as we all know the mainstay and the support of a family of children a condition of mind which is more or less antagonistic toward utilities in general

Whether in the city or communities in the utility is rendering service is a factor and a on the selection of forms of office help to meet and handle complaints year in and year out

Department is fundamentally important morale of and staff the acid test Their habits after hours are an important element in determining to serve and appreciate the customer's point

view Their tendency to save money their ability to originate a solution for daily problems displays ability to analyze an invaluable gift Courtesy among office employees themselves is a constant and wonderful training as a matter of fact a good place to start to teach employees to be polite is right in our own offices Courteous manners are a matter of habit practice alone will develop courtesy to a noticeable point

Young men employees addicted to novelties in dress and appearance or other noticeable peculiarities which stamp them as being neither of nor for the great masses whom they meet every day are an irritable type to customers whom the utility is endeavoring to serve

A utility office is no place for a display by either sex of the fashions of the day The average office worker cannot afford it therefore it disturbs or distorts the mind which in turn does not promote civility This mental attitude and extravagant display conveys to the customer anything but the kindly interest and sincere desire to serve which should represent the utility's most valuable asset

A type of employee who has never served in the ranks in the work a day world finds it hard to appreciate the wage earner's problems To them overalls calico shawls and sixth grade educations do not merit consideration courtesy But after all as he contributes to the volume of the business in the great department stores of our cities the wage earner is the sole support of the utility if it pays dividends these dividends come from him if a franchise is voted down it comes from him if a mass meeting is held it is made up largely of his kind

It means a lot to the utility to cultivate him help him serve him share responsibility with him assure him of his right to reasonable service and when this program has been inaugurated and lived up to many of our troubles will have faded away

By courtesy Second Year Symposium

THE MAGIC CHEF

A [illegible] Magic Chef [illegible] the Magic Chef [illegible] from the fact that it would seem the magic [illegible] results attained by the setting of a temperature [illegible] where they are setting the temperature through [illegible] means whereby [illegible] roasting or baking

In the June number we made a report of the meeting [illegible] Gas Industry Magazine which is published monthly and to the American Gas Association the eight [illegible] channel certain to be [illegible] quoted from the Gas Industry Magazine is a [illegible] story of [illegible] Advertising [illegible] the number of a Irish lawyer used when appealing to a jury [illegible] told

We take off our hat to the Magic Chef

Mix a little heart as well as head with your business

British Association Activities

British Commercial Gas Association Holds Convention Bringing Commercial Gas Subjects to the Fore --- What is Being Done Abroad, Should Interest Our Home Gas-Men Both in the Fields of Natural and Manufactured Gas

BEFORE printing extracts of papers, let us tell briefly something of the British Commercial Gas Association, which is doing fine work work across the sea.

Sometime since, the publisher of the GAS INDUSTRY Magazine in the United States received a letter from the then president of the British Commercial Gas Association stating that he desired to communicate an interesting fact to the founder of the National Commercial Gas-Association in the United States (addressing Lucius S. Bigelow, Publisher of GAS INDUSTRY Magazine, and founder of the N. C. G. A.), that he might know that inspiration connected with the founding of a commercial gas association in Great Britain in no small measure arose from the success of the National Commercial Gas Association in the United States.

Could anything more gracious have occurred than a communication of such nature at once recognizing the fact that the idea of specializing along commercial gas lines after a national fashion and through the aid of a national association originated in the states, and was found of such value as to make a similar movement thought desirable in Great Britain.

Our National Commercial Gas-Association in the United States, by virtue of uniting with the late American Gas Institute, has not lost its identity in this commercial gas labor, nor its specific connecton with that field, since it is today the great commercial wing of the American Gas Association, and as a part of the gift of the N. C. G. A. and its activities, we find the Manufacturers' Section of the A. G. A., performing splendid work. However, on the other side of the Atlantic, the commercial gas movement remains as formerly exploited by an entirely separate organization from the other gas associations which are essentially technical.

Among papers presented before the British Commercial Gas-Association and before the Scottish Junior Gas Association at recent conventions, appeared one upon "Domestic Gas Production", by S. Tagg, Engineer and Manager of the Preston Gas Company; another, "Service to Consumer", by Harold E. Bloor; another, "Meter Surveyor Inspector, the Backbone of the Sales Department," by G. D. Alexander; another, "The Gas Company Show-Room", by C. S. Shapley. We are indebted to "The Gas Engineer" of Great Britain, for the following summaries of several of these papers:

GAS FOR INDUSTRIAL PURPOSES

By W. J. SANDEMAN

ALTHOUGH gas was used for industrial purposes previous to 1914, war conditions gave it such an impetus as it could never have hoped to receive under normal conditions. As a result, remarkable progress was made in a surprisingly short time. One authority tells us that in this direction more progress was made in five years than in the previous fifty. Gas for manufacturing processes may be said to have come into its own during the last seven years. Today, the urgent call is for increased production.

Indispensable as gas was during the period of strife, it is even more necessary during the present trying times, when the manufacturing world is endeavoring to get an economic balance and stimulate demand for its goods. Gas as an industrial fuel proved its worth during a vitally critical period in the nation's history, and consequently, having stood such a severe test, and emerged with flying colors, it may rightly be regarded with confidence by manufacturers who today realize its efficiency and almost universal scope of application. It has been estimated that something like 2,000 distinct industrial heating processes can be accomplished by gas; and while lack of time renders it impossible to dwell upon the technical uses of gas, it is felt that a few of its applications may with advantage be briefly referred to. All works require power, and the gas-engine has established itself as a most efficient, reliable, and economical prime mover. Where it is desired to distribute electrical power to various units scattered about a wide works, the current can be cheaply generated by a gas-engine and dynamo. This represents a sound financial proposition, as it is possible in this way to utilize electricity at a far more favorable figure than if it be taken from local supply undertakings. Should steam power be required, the requisite steam can be quickly raised by means of a gas-fired boiler.

Then there is that wide field of the heat-treatment of metals, in which processes gas-furnaces are an unqualified success, because of the ready manner in which temperatures can be controlled. Among these heat-treatment processes, one may mention tempering, hardening, annealing, case-hardening, etc. We also have metal melting by means of the gas-fired, crucible furnace. With natural-draught burners, temperatures of about

Mental ease is a full brother to physical laziness

of the volume sold in December. The incidence of the load had an important bearing on the price of gas, but despite the improvement in the summer output there was a difference of 6.8d. per thousand c. ft. in the margin of profit between the minimum and maximum months last year.

The disturbance of economic conditions occasioned by the war appeared to have affected the Lancashire undertakings more seriously than in other parts of the country, for whilst Lancashire shows an increase of 3 per cent. in the six years since 1913 the increased sales over the rest of the country were 12 per cent. As 75 per cent. of the total gas sold in the country is supplied by local authorities, the importance from the national standpoint of further developing the sales of gas, and so reducing the evils of the smoke nuisance, should inspire those responsible for the administration of the gas undertakings to renewed and sustained efforts.

SERVICE TO THE CONSUMER

By Harold E. Bloor

THE essential condition to the maintenance of present business and ultimate extension to the much larger dimensions to which we feel it should attain is public confidence in our desire to deal fairly with consumers and to give them ever better and cheaper service, said Mr. Bloor, at the Bradford Conference of the B. C. G. A. I regard suspicion of the gas meter as a distinct factor in checking the extended use of gas, and I could see nothing but a general belief in the fairness and honesty of gas undertakings strong enough to overcome it. Complaints as to meter registration rarely or never come from slot meter consumers, who pay as they go along, and have doubtless as definite a sense of buying gas as of buying meat.

We have appliances or piping in bad condition and suffer quite a lot of inconvenience and annoyance before they are moved to ask for relief. It is a fact beyond dispute that the general level of satisfaction with gas supplies furnishes no ground for complacency on our part, and it is a matter of urgency that the standard be improved.

Gas apparatus calls for a certain though very small amount of regulation and attention at the hands of the consumer, and both internal piping and service pipes may be partially blocked, with peculiar and confusing results. Thus you have complaints that the gas is bad only in certain positions or at certain times or at odd times. Again, burners are found with the air supply shut off or choked with dust or grease, or with an excessive air supply. All such troubles are unhesitatingly put down to "bad gas" by the consumer, and calorific charts or inspectors' tests are useless from his point of view.

To ascertain the conditions existing in a selected assortment of houses from which no complaint had been received he caused a canvass of a hundred houses to be made by a tactful and efficient man, with the following results:

Houses Visited	100
Fully satisfied consumers	75
Consumers who stated apparatus required attention	8
Partly blocked services	6

A consumer's statement that he was "quite satisfied" was accepted during this canvass without question.

METER SURVEYOR INSPECTOR THE BACKBONE OF THE SALES DEPARTMENT

By G. A. Alexander

THE meter survey inspector should be regarded as the backbone of the sales department. Inspectors ought not to be changed about from district to district, because nothing engenders a feeling of suspicion among customers more than the continual changing of inspectors. On the other hand, a regular call from the same official on the same customers promotes confidence and goodwill.

In a city it is rather difficult to fix what might be considered a satisfactory minimum area for surveying it, because where there is tenement property there is often a great deal of work with very little in area to show for one's labor. There are few districts in a city like Glasgow, with its high proportion of tenement property, where high-speed surveying could be kept up regularly. A large number of meters might be surveyed at the commencement of a survey when one was fresh on the job; but there are many things to be taken into account, all of which tended to prevent the maintenance of high speed. In the cities and suburban areas of cities with villa and cottage property, every district must be regarded as a problem in itself. There is one difficulty which he was sure would be apparent to all the members of the Association—the position of meters. It appears at times as if meters are fixed so that they were well out of the reach of gas inspectors—they never seemed to be placed with the thought that they would be read regularly and with facility. When it is realized that an inspector might be carrying with him an average of 150 or 160 surveying cards, a flash-lamp, and a pen or pencil, it would be conceded that he had almost to emulate the feat of Blondin in making the indices from certain meters. The latter are often as not in the most inaccessible positions possible.

Again, it might be more of a serpent-like crawl to get to meters in some out-of-the-way corners. I have in mind a certain street of a comparatively new property where there are probably 150 meters in all. I would rather have surveyed 100 of them twice over than the other 40 or 50. To outward appearances the houses look very much alike; yet in three or four of the tenements

or not any gas is furnished; for which service charge the Company shall not be required to furnish any gas; and

(b) A primary charge of thirty-five cents (35cts) per one thousand (1,000) cubic feet for all gas furnished; and, in addition thereto and superimposed thereon, secondary charges for gas furnished in any period of thirty (30) days to any one consumer at any one location, regardless of the number of connections or meters through which such gas is delivered or measured, as follows:

Ten (10) cents per one thousand (1,000) cubic feet for all gas in excess of five thousand (5,000) cubic feet and not in excess of ten thousand (10,000) cubic feet;

Twenty (20) cents per one thousand (1,000) cubic feet for all gas in excess of ten thousand (10,000) cubic feet and not in excess of twenty thousand (20,000) cubic feet;

Thirty (30) cents per one thousand (1,000) cubic feet for all gas in excess of twenty thousand (20,000) cubic feet and not in excess of thirty thousand (30,000) cubic feet;

Forty (40) cents per one thousand (1,000) cubic feet for all gas in excess of thirty thousand (30,000) cubic feet and not in excess of fifty thousand (50,000) cubic feet;

Sixty (60) cents per one thousand (1,000) cubic feet for all gas in excess of fifty thousand (50,000) cubic feet and not in excess of one hundred thousand (100,000) cubic feet; and

Eighty (80) cents per one thousand (1,000) cubic feet for all gas in excess of one hundred thousand (100,000) cubic feet.

(c) The Company shall quarterly pay into the Sinking Fund of the City of Cleveland fifty per cent. (50%) of the gross revenue derived from secondary charges, which sums shall become the property of the City of Cleveland. The Company shall retain all the gross revenue derived from service charges, all the gross revenue derived from primary charges, all the gross revenue derived from forfeited discounts, and fifty per cent. (50%) of the gross revenue derived from secondary charges.

(d) Bills computed at the foregoing rates shall be payable at the main office of the Company in the City of Cleveland, or at such branch collection agency or agencies therein as said Company may from time to time establish therefor, on the first day of each month, or such other date as may be established by the Company for the maturity of bills in said City or portion thereof, subject, however, in the case of each bill paid within ten (10) days from the first of the month, or other maturity fixed therefor, to a discount of five (5) cents per one thousand (1,000) cubic feet.

Section 3. Extensions. The Company shall extend its pipes and mains for furnishing natural gas to and upon any dedicated street in the City of Cleveland as now defined, or as may hereafter be extended, whenever any group of prospective consumers shall deposit with the Company an amount equal to fifty per cent (50%) of the cost of installing such pipes and mains, and, during a period of ten (10) years after the installation of any such pipes and mains, the Company shall quarterly repay ratably to the persons making such deposits amounts aggregating fifty per cent. (50%) of the Company's share of gross revenue received from consumers to whom gas is furnished through such pipes and mains, provided that the amounts to be so repaid shall be limited to the amount so deposited for each extension. If the Company fails or neglects to comply with the provisions of this Section, for each and every day that such neglect or failure continues after six (6) months from the receipt of such deposits by the Company, it shall pay to the City as liquidated damages the sum of One Hundred Dollars ($100) per day.

The title of the circular issued for the public of Cleveland, and from which the foregoing is an excerpt, bears in large type the words, "Fifty-fifty Profit Sharing Schedule."

GAS BURNER FACTS

THE Bureau of Standards is called upon to investigate and test very many gas devices of which not a few are termed "gas-saving." After making a number of tests, the Department has stated, "There is no justification for the exaggerated claims of economy made for any of the gas-saving devices that were tested in connection with this particular investigation." Those who are approached by individuals or concerns offering burners claiming "special efficiency" or "gas-saving," or "safety," should use exceeding caution before buying or adopting such offerings.

One burner submitted showed excellent efficiency, but the advantage was completely offset by the odor given off and the large amount of carbon-monoxide produced. The report adds, "Remembering that 0.04 per cent carbon-monoxide in the atmosphere is the maximum amount that should be tolerated even for an hour or two of exposure, it is readily calculated that the concentration in an unventilated room of ordinary size, soon becomes dangerous and unhealthy if such gas-saving devices are operated for a short period of time. If several gas-savers are used at the same time, the hazard becomes extremely acute. Notwithstanding the fact that these tests were made in a large and well ventilated room, the persons making the tests experienced severe headaches."

There are many designs of so-called gas-savers on the market. None as yet, however, so we are informed, have passed the test which would prove them what is claimed for them. Had any of these devices enjoyed the merit claimed for them, such merit, we are sure, would have at once been granted them by the Bureau of Standards.

In no sense whatsoever would we wish to discredit any worthy appliance, especially one which possesses the merit of efficiency or economy. However, we warn all of those to whom this message may come, to be exceedingly careful before adopting so-called burners or devices showing "remarkable" efficiency or economy.

THE PRINCE OF "WALES"

[illegible] no intent to be facetious but simply because the inventor's name is "Wales," has that new system of house and institution heating known as the "Wales System," been given the name of [illegible] royalty, of whom, because of like popularity, we [illegible] heard much in the daily press during the recent [illegible]

[illegible] "Wales" system of heating is not a "hot-air" [illegible] but is applied to the warming of buildings [illegible]gh the agency of steam or hot water generated in [illegible] fired boiler. The "Wales" System is automatic [illegible] from the standpoint of gas operation and electrical [illegible] it embodies a blower system, ensuring pro[illegible] air and gas pressures and consequent uniformity of [illegible] results.

[illegible] Wales Company has gone a step beyond simple [illegible] gas system in so far that it also provides a com[illegible] gas and coal boiler in the use of which the [illegible] may without removal of burners, switch from [illegible] gas or gas to coal. Such combination is much [illegible] where during a portion of the season [illegible] in the dead of winter coal is frequently the [illegible] with gas being the medium spring and [illegible] this combination boiler may be operated con[illegible] on gas if so preferred.

[illegible] all gas boiler of the "Wales" system is a unit [illegible] be applied where gas is sufficient in volume at all seasons, and may be used where gas is considered comparatively high in price because of the exceeding efficiency of this type of boiler, employing as it does automatically controlled, electrically driven air pressure.

There are stored in the boiler between the tubes, fire clay spheres which become intensely hot in a brief period after igniting the gas or coal, or let us as well say coke, for this device in combination form, built for gas or hard fuel, is especially well adapted to the burning of coke since the doors may be practically hermetically sealed similarly as refrigerator doors are, thus causing the coke to burn to excellent advantage.

It is, of course, a recognized fact that to intense heat fire clay that has been properly placed, is a most excellent means of producing desired results, and this fact has been made good use of in designing the Wales method.

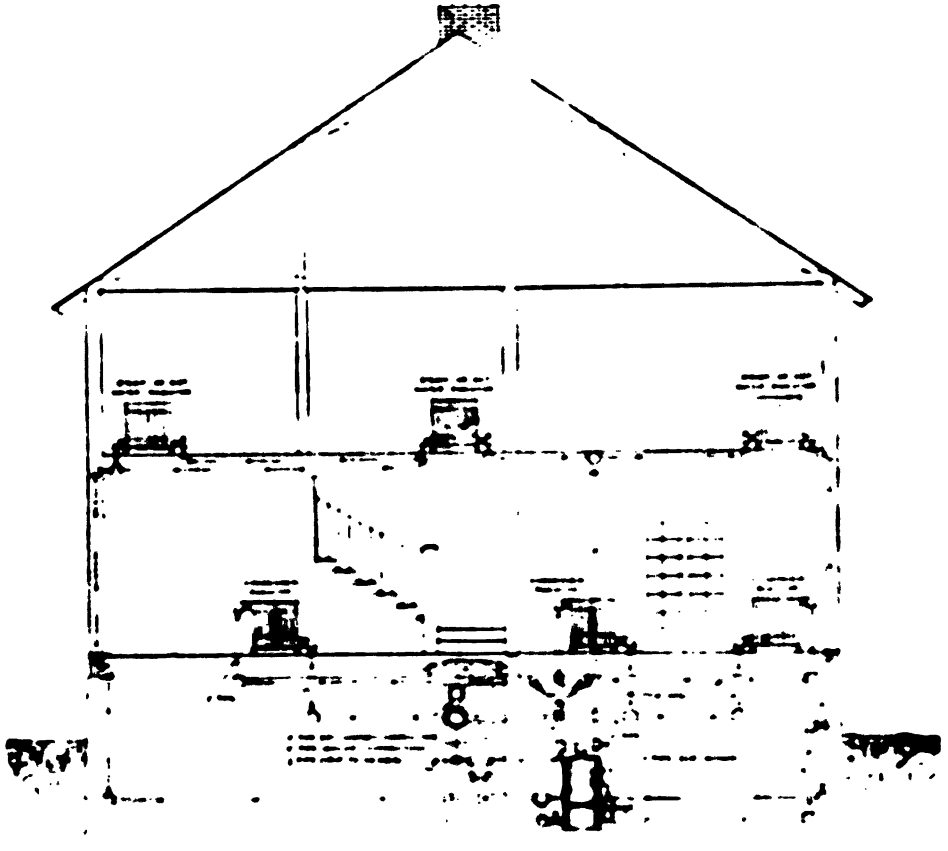

SECTIONAL VIEW OF TYPICAL RESIDENCE SHOWING PIPING ARRANGEMENT FOR CONDENSER RADIATION TOGETHER WITH STEAM OR HOT WATER RADIATION

Unlike any other heating plant with which we are conversant, the Wales system is not a condenser radiation method, one which extracts from the stack and delivers to space to be heated, the flue stack temperatures that usually pass from boiler direct to chimney, at the same time condensing the excessive amount of water formed in certain gas, covering this water through a drip pipe to sewer instead of delivering it into the chimney where such delivery is generally upon vessels of water has a tendency to leave deposits placed on the room side of the mantel and likewise which water tends to disintegrate bricks and mortar.

Fortune has wings. It wouldn't get anywhere if it remained on the ground

A. G. A. PROGRAM

S there are in the natural gas field various interests whose activities include now or may in the future include manufactured gas service, we print the following program of the g convention of the American Gas Association

appended Program of Business Sessions is ted in tentative form, and being purely tenta subject to revision.

1922 CONVENTION, ATLANTIC CITY
WEEK OF OCT. 23, 1922

MONDAY

MANUFACTURERS SECTION

Auditorium, Second Floor, Boardwalk Front

TWO THIRTY O'CLOCK

of Chairman John S DeHart Jr, Newark, N J
of Secretary C W Berghoen Jr, New York, N Y
of Nominating Committee George D Roper Rock Ill
of Chairman and Vice Chairman
tion of New Officers
ment

TUESDAY

GENERAL SESSION

Convention Hall, Ocean End of Steel Pier

TUESDAY MORNING—TEN O'CLOCK

g called to order D D Barnum (President)
of Secretary Manager Oscar H Fogg
ship Report and election of individual members
of Treasurer H M Brundage
of the President—D D Barnum
and Place Committee Report (1923 Meeting)
tion and By Laws amendments) Wm J Clark
of Gas Appliance Specifications (Committee Report)—
m T Roach
Are We Justified in Applying the Cost of Ser
Principle in the Gas Industry (Address) Hon
D Jackson member Railroad Com of Wisconsin
President Nat Assn of Railway and Utilities
commissioners
Showing A to A's latest film, "Around
with Gas" Auditorium No 1 second floor)
Pier

EXECUTIVE SESSION

Company Member Delegates eligible to attend
Company Members
Directors
1921 Nominating Committee
Committee on Resolutions

ACCOUNTING SECTION

Auditorium No 2, Second Floor, Steel Pier, Boardwalk Front

TUESDAY TWO THIRTY O'CLOCK

Chairman Ewald Haase Milwaukee
of Officers (Nom Com Report) W H Pettes
Accounting (Com Report) W A Doering, Bos
Mass
Description of Typical Systems of Consumers Accounting
General Analysis of Such Systems from the Standpoint of Organization Karl Jorgensen Bureau of Commercial Economics Chicago
J Description of System "Bookkeeping Without Books" W H Cassell Baltimore

COMMERCIAL AND PUBLICITY AND ADVERTISING SECTIONS

Meeting Jointly

Vernon Room, Hadden Hall, Facing Boardwalk at North Carolina Avenue

TUESDAY TWO THIRTY O'CLOCK

Chairman's Report (Commercial Section) A P Post, Phila
Nominating Committee Report and Election of Officers (Commercial Section)
Sales Stimulation (Com Report) Wm Gould Boston
Industrial Sales (Com Report) F F Cauley Chicago
Publicity and Advertising Section (Com Report)—A A Higgins Providence
Nominating Committee Report and Election of Officers (Publicity and Advertising Section)

TECHNICAL SECTION

Convention Hall, Ocean End of Steel Pier

TUESDAY TWO THIRTY O'CLOCK

Remarks of Chairman C N Chubb Davenport
Nominating Committee Report and Election of Officers—R B Harper Chicago
Committee on Carbonization and Complete Gasification of Coal (Report) L J Willen, Boston
*General Topics for Discussion

WEDNESDAY

GENERAL SESSION

Convention Hall, Ocean End of Steel Pier

WEDNESDAY TEN O'CLOCK

Rate Structure (Com Report) J D Shattuck
Public Relations (Address) J S S Richardson, City Editor, Public Ledger Phila
(Presented for Publicity and Advertising Section)
Address Hon W D B Ainey, Chair Public Service Com of Penna.
Accident Prevention (Com Report) Charles B Scott
Resuscitation from Carbon Monoxide Asphyxiation (Committee Report) By Dr Yandell Henderson and Dr Howard W Haggard of the Laboratory of Applied Physiology, Yale University New Haven Conn

COMMERCIAL AND PUBLICITY AND ADVERTISING SECTIONS

Meeting Jointly

Vernon Room, Hadden Hall, Facing Boardwalk at North Carolina Avenue

WEDNESDAY AFTERNOON TWO THIRTY O'CLOCK

Distribution Design (Com Report) [illegible] Phila
[illegible] Presentation of the Industry Ideal Distribution System Paper [illegible] New York
Description of a Distribution System in which Means of Large Industrial Loads Paper B S Pfeiffer Philadelphia
Developments in Gas Pipes and Meters (Com Report) R I Brown Pittsburgh
*General Topics for Discussion
Committee on Consumers Accounting Report continued Report of Sub Committee on Small Gas Company Systems
Uniform Classification of Accounts for Gas Corporations (Address) Geo C Mathews Chief Statistician Railroad Com of Wis

ECONOMICS OF PETROLEUM

The title to this notice is likewise a title applied to a book published by John Wiley & Sons, Inc., the same being from the pen of Joseph E. Pogue, Consulting Engineer and writer of several volumes upon power resources, energy resources, etc.

The book has 375 pages, is 6x9 inches, has 151 figures, covers 100 tables. This work is bound in cloth, price $3 postpaid.

We can best convey a knowledge of the field covered, by printing a list of the features treated by the writer.

Table of Contents

Economic Organization of the Petroleum Industry, Source Situation, Trend of Oil field Development, Production and Refinery Practice and Capacity, also Refinery Stocks, marketing Products, Transportation of Crude Petroleum, Gas and Fuel Oil, Petroleum By products, Natural Gas and Natural-gas Gasoline, Export Situation, Price Trend, Relation between Price and Production of Crude Petroleum, Automotive Transportation, The Economic Significance of Cracking, The Motor fuel and Natural-gas Problem, International Aspects, Mexico as a Source of Petroleum, Relation of the Coal Industry to the Oil Industry, The Oil-shale Industry, The Full Utilization of Petroleum, The Function of Statistics in the Petroleum Industry.

BOOK REVIEW

Mr. Anthony Blum has written a very interesting and instructive book, entitled, *"Petroleum: Where and How Found It."* It appears in five parts bound under one cover, the parts being as follows: Geological Phase, Constructive Features, Operative Phase, Commercial Phase, Fiscal Features.

The work was copyrighted within the current year, and sold at $2.00 a volume, being published by the Modern Engineering Books Publishing Company of Chicago, and Dodge & Company, London, England. The Table of Contents contains subdivisions under each of the parts, starting with the origin and accumulation of petroleum and following it through all of the various processes, including methods of extinguishing burning wells, testing oil and gas wells, shutting water in oil and gas wells, means of preventing waste, how to increase production, prospecting for petroleum, etc., etc.

Mr. Blum has added through this production an extensive compilation that will be helpful to many in the field as well as to heads of departments.

HER VIEW

A new made widow called at the office of a leading insurance company for the money due on her husband's policy. He said: "I am truly sorry, madam, to hear of your loss."

"That's always the way with you men," she said; "you always sorry when a poor woman gets a chance to make a little money."

COMPRESSOR CYLINDERS

THE very fact that so much is being said regarding conservation in the natural gas field and the fact that the Bureau of Mines is taking so active a hand in this matter is proof positive that the industry of natural gas is passing through a transition stage from a vast non appreciated volume to a lessening volume the value of which is impressing itself upon the minds of not only gas men, but the natural gas using public in the United States.

The time has come when every unit of gas is counted as having actual value, and therefore each unit being a unit worth saving and when saved worth delivering for utilization.

When nature supplied pressure giving tremendous energy to the gas she delivered through casings at wells, pressure sufficient to carry the product of nature's retorts long distances through pipe lines without supplemental pressure, the need for compressor cylinders was not at all what it is today. Now, as the gas man knows, it is found necessary not only to pump from wells that formerly delivered gas under their own pressure, but also to compress the gas in order to deliver it to distant points, in some instances a series of compressing stations being necessary. The C. & G. Cooper Company of Mount Vernon, Ohio, has produced a compressor cylinder that is indeed a most effective piece of mechanism.

One of the principal construction details allows the diameter to be varied over a considerable range by simply changing a liner. This as one can readily see not only saves the cost of a new cylinder, but provides a simple means of maintaining the highest possible compression efficiencies as the suction pressures fall.

In developing this Cooper compressor cylinder mechanism self cleaning plate valves were deemed so important that such have been incorporated as an improvement in valve construction. This improvement is both mechanically and from the standpoint of successfully handling the impurities frequently found in natural and casinghead gases a very leading feature. It is said that the Cooper valve solves some of the [illegible] problems while improving operating results.

Back of the [illegible] cylinders is the element of [illegible] experience and [illegible] engineering construction which [illegible] compressor cylinder construction.

To indicate [illegible] to every point [illegible] made standard [illegible] of the sizes are [illegible] same base.

The [illegible] parts for [illegible] high type [illegible] fered that [illegible] differential [illegible]

Try this: Courtesy in the face of discourtesy

AROUND THE BELT

New Wells, New Pipe Lines, New Contracts, Additions and Extensions. A Fund of Valuable News Gathered for the Journal Through Many Sources.

TRADE PERSONALS

Barcroft, H. G., of Bradford, Pa., has been elected President of the Pennsylvania Oil & Gas Men's Association.

Clifford, T. C., of the Pittsburgh Meter Company at the recent meeting of the directors of the Association of Natural Gas Supply Men, was re-elected Treasurer.

Felix, Otto, of the Equitable Meter Company, Pittsburgh, has been elected Vice-President of the Association of Natural Gas Supply Men.

Graeber, H. W., who was formerly in charge of construction work with the Oklahoma Gas & Electric Company, Oklahoma City, Okla., but left a short time ago, has again taken up his duties in the same capacity.

Graham, L. L., of Oil City, at the annual meeting of the Pennsylvania Oil & Gas Men's Association, was elected Vice-President of the organization.

Halporn, A. D., formerly on the sales staff of the Combustion Engineering Corporation active in the Philadelphia territory, is now representing the same company in its New York territory.

Karb, George B., former Mayor of Columbus, Ohio, has been elected President of the Ohio Association of Independent Oil Men, recently formed.

Lord, R. S., President of the Hope Engineering & Supply Company, accompanied by Mrs. Lord, recently visited the Wyoming fields.

McKinney, C. B., is President of the Municipal Gas Company, Dallas, Texas, formerly known as the North Texas Gas Company.

Miller, Fred A., of the S. R. Dresser Manufacturing Company, Bradford, Pa., has been re-elected President of the Association of Natural Gas Supply Men.

Moore, George N., has resigned from the office of President of the Shaffer Oil & Refining Company, Arkansas City, Kan., remaining, however, a member of the directorate.

Nobbe, F. A., Assistant Secretary and Assistant Treasurer of the Louisville Gas & Electric Company, Louisville, Ky., recently completed a service period of fifty years with the company.

Owen, C. L., Commercial Agent of the Muskogee division, Oklahoma Gas & Electric Company, has been elected Vice-President of the "Go-Get-'Em" Club, a new Muskogee booster organization.

Schonfield, H. B., President of the Haynesville Natural Gas Company, Haynesville, La., heads an organization being formed in Shreveport, La., which purposes to construct a line to Homer, La., from Webster Parish where its production is located.

Steele, Charles E., of Port Colborne, Ont., has been elected to the Ontario Gas Board, representing gas producers in the Province of Ontario. The board comprises three members.

Thomas, Willis H., is now Sales Manager for the Oil Well Supply Company at the company's branch at Fort Worth, Texas.

Upham, D. A., oil operator of Mineral Wells, Tex., is reported to have purchased the properties of the Consumers Gas & Fuel Company, supplying Weatherford and Mineral Wells, Texas.

Waters, Edgar T., has been appointed Credit Manager of the Oil Well Supply Company's branch at Fort Worth, Texas.

Way, William B., has been re-elected Secretary of the Association of Natural Gas Supply Men. Mr. Way is located at the Association's headquarters, Oliver Building, Pittsburgh, Pa.

DECEASED

Hardee, William, Chairman of the Board of Directors of the National Supply Company, and one of the founders of the company, died at his home in Toledo, Ohio, at the age of seventy-six years.

Troutman, Philip A., formerly District Superintendent of the Carnegie Gas Company, and later widely known as an oil and gas operator in Western Pennsylvania, died at his home in Waynesburg, Pa., at the age of sixty-four years.

INCORPORATED

WEST VIRGINIA—*Charlestown*—The Meigs & Summers Oil & Gas Company has been incorporated in this city with a capital stock of $25,000. Among those interested in the venture are: J. V. Reishman and W. J. Reishman, of Charleston; W. A. Charlton, Hinton; Thomas W. Shields of Frankford and W. D. Gwinn, of Green Sulphur Springs.

Wyandal—A charter has been obtained by the Wyndal Oil & Gas Company, incorporated for $25,000. Those named as interested in the new company are: T. A. Deitz and U. G. Thomas of Charleston; G. N. Shirley,

If "luck" comes to you, it is through some sensible thing you have done or said

No. 1 of the Oil Operators Trust Company on the Murphy property, section 8-16-15, located nine miles from this city, is said to have had a production of 125,000,000 cubic feet when drilled in. However, a crater formed around the well due to its blowing in, after which it caught fire and burned for several days and finally extinguished itself, the flow of gas ceasing completely.

KANSAS—*Dexter*—A $2,000,000 plant utilizing the helium from the local fields is spoken of. Interests represented by Charles S. Rader are reported to have leased 2500 acres of land for development.

Topeka—Application for a charter for the Empire Natural Gas Company, a $12,000,000 corporation growing out of the proposed merger of the Kansas interests of the Empire Companies, has been filed. The corporations concerned in the merger are the Kansas Natural Gas Company and the Empire Gas & Fuel Company.

LOUISIANA—*Haynesville* — The Haynesville Gas Company is making rapid progress in laying its distributing system to all points of the city. Certain sections are already enjoying natural gas service. H. B. Scofield is President of the Company.

Monroe—The Ouachita Natural Gas & Oil Company of this city is reported to have completed a large gasser in section 29-20-4 at a depth of 2234 feet.

NEW MEXICO.—*Aztec*—According to a report a very large gasser has been completed at Aztec, a place located not far from Durango.

NEW YORK—*Olean*—Joseph I. Hutchings, it is reported, has completed his No. 11 well in the Four-Mile field and reports good oil production at a depth of 1100 feet.

Tonawanda—Wells are to be drilled by the Republic Light, Heat & Power Company, it is reported, near this place on the Guideboard road.

Wellsville—The Alfred Gas Company has been purchased by J. W. Weir of Belmont, and H. C. Swarthout of Wellsville. Directors have been elected as follows: J. W. Weir, H. C. Swarthout, M. Casey and W. J. McAndrews.

NORTHERN OHIO—The Cities Service Company has approved plans involving the expenditure of several million dollars on improving the properties of the Ohio Public Service Company.

The plans approved call for the construction of a sixty-mile 130,000 volt steel tower transmission line from Lorain to Mansfield, Ohio, a similar line 55 miles long between Warren, Alliance and Canton, where it will tie in with the system of the American Gas & Electric Company which now operates a large power plant on the Ohio river. In addition, the plans call for the installation of a 20,000 K.W. turbine at the Edgewater plant at Lorain, Ohio, and a new 30,000 K.W. turbine in the Toledo Edison Company plant in Toledo.

This development work when completed on the Ohio properties at Mansfield, Massillon, Elyria, Lorain and Alliance will make available for service generating capacity now held in reserve in the individual plants.

Athens County—In York township, the Dorr Run Oil and Gas Company has drilled its test on the Frank Tedrow farm through the Clinton sand. It is a fair gasser.

Bremen—The Pure Oil Company has completed No. 1 on the Frank Miller farm in the Clinton sand. It is reported that the well is making 200,000 cubic feet of gas and is also spraying about a barrel of oil daily.

Cincinnati—The Welsbach Street Lighting Company has been awarded the city lighting contract covering a period of three years. The contract involves the upkeep of 4000 lights.

Cincinnati—At the annual meeting of stockholders of the Cincinnati Gas & Electric Company, directors were re-elected as follows: Samuel Assur, Alfred M. Cohen, Edward H. Ernst, Charles D. Jones, Richard K. LeBlond, H. W. Lothmann, M. E. Moch, George W. Noyes, Rufus B. Smith, Charles P. Taft and Charles F. Windisch.

Columbus—The Ohio Oil & Gas Men's Association will meet in this city October 4th and 5th. The sessions will take place at the Elks' Home. J. W. McMahon of Toledo is President of the Association, and W. H. Thompson, Columbus, is Secretary.

Haydenville—The Dorr Run Oil & Gas Company in its No. 1 on the Frank Morrow farm reports a 500,000-foot gasser in the Clinton sand.

Kent—The American Fuel & Oil Company has brought in a good gasser on the Oettler farm near this city Production was reached at a depth of 450 fet. It is reported that a number of additional wells are to be drilled in this section.

Washington County—In Grandview township the Matamoras Oil and Gas Company's test on the James Anderson farm is a light gasser in the Big Injun sand.

OKLAHOMA—*Bartlesville*—A chapter of the Doherty Men's Fraternity has been organized by fifty employes of the Bartlesville Gas & Electric Company. Officers elected are: Thomas Patterson, President; Burr Reynolds, Vice-President, and M. C. Harrison, Secretary.

Blackwell—The Hope Engineering & Supply Company recently completed the construction of a 16 mile 10-inch pipe line from Tonkawa to this city for the Blackwell Oil & Gas Company. This new line will insure an ample supply of natural gas for this city and as well for the smelters located in this district. Dresser couplings and plain end pipe were used in the construction of the line.

Comanche County—The Gypsy Oil Company in its No. 5, section 24-1n-9w, is reported good for 20,000,000 cubic feet.

Creek County—In No. 2, section 23-16-9, the Jomack Oil Company has completed a 15,000,000-cubic foot gasser.

Lyons-Quinn field—A study of the effect of shooting wells as a means of increasing the production of oil in this field is being made by M. J. Kirwan, Petroleum Technologist of the Bureau of Mines.

Noble County—The Pennock Oil Company has an 8,000,000-foot gasser in No. 1 Endicott, section 34-25-1w.

Practice this: Holding your tongue between your teeth so it won't cut your throat.

mah Private ownership of the local gas plant was ed by 577 voters at a recent popular election, three who were for municipal ownership. Muni- unds to the amount of $90,000 were burned after nt of the votes had been completed

ather County In No 1 section 2-10n-9e, Jennings town have completed a gasser having a production ted at around 10,000,000 cubic feet

Atlantic Oil Producing Company in No 2, section 3r, has a large gasser

ie Phillips' No 6, section 13 11 11 is reported as g around 6,000,000 cubic feet

ulsey County Galbreath and others have a 4,000 ot gasser in No 2 Davidson, section 28 13 14, total 2,075 feet

l and others, in the Tiger Flats district, have a 00 foot gasser in No 2 Wooden, section 14-12-12, 183-85 feet

ner County A good gas producer has been com- to the Magnolia Petroleum Company in its No 1 son 5 22-3

Avis County The Carter Oil Company in its No ction 32 In 8w has a gasser estimated at 11,000,000 eet

Lone Star Gas Company in No 2, section 18 1s- making around 12,000,000 cubic feet of gas per

ce The local board of trustees has applied to the ation Commission for permission to construct a ch main from the Poteau fields to this city, so atural gas service may be made available to the ts of Winter

NNSYLVANIA *Allegheny County* In Scott gh H O Walters & Company have a light gasser st on the Albert Snyder farm

ne County Myers Long & Company are reported completed a 12,000,000 foot gasser on the Haw- ers farm in Washington Township

aster The city has renewed its street lighting t with the Welsbach Street Lighting Company g a period of one year

burgh The Equitable Employes Association of hiladelphia and associated companies recently held Night at the Duquesne Gardens An excellent m t musical numbers was presented by members association James V Wakefield gave an interest- which he entitled "The Call of the Yukon"

burgh The Pennsylvania Oil & Gas Men's Asso- meeting recently in this city, elected officers and rs as follows H G Bancroft, of Bradford, Pa, ent L L Graham, of Oil City, Vice President, A Dennison of Bradford, Secretary and Treas Directors George L Craft, Warren, Pa, Lev Mills, Beaver, Pa, James H Duff, Pittsburgh Pa H J Slicker, Knox, Pa, Joseph Fleming, Titusville Pa F A Troutman, Waynesburg, Pa, J L Wasson, Butler, Pa, William J Healey, Bradford, Pa, David B McCal mont, Franklin, Pa James P Eagleson Washington Pa, and R M Herman, Tionesta, Pa Executive Com mittee P H Curry and James H Duff Pittsburgh Earle C Emery, Bradford Pa, and David B McCal mont, of Oil City

Pittsburgh At the Chatham Hotel the women mem bers of the Equitable Employes Association composed of employes of the Philadelphia and allied companies, re cently gave themselves a jolly party A sumptuous ban quet was provided followed by an excellent social pro gram The speaker at the dinner was Miss Mary Russell Furman of the Associated Bureaus and Vice President of the International Quota Club Music by a girl's orchestra was greatly enjoyed during the course of the evening

Washington County In South Strabane township Baughn and Dunman have drilled in a good gasser at a test on the H Gamer farm

The Pure Oil Company has completed a large gasser in its test on the Martin farm near Tunnel Warren town ship

TEXAS *Breckenridge* It is reported that no less than twenty casinghead plants are operating in this dis trict Two new plants will shortly be placed in com mission, one being the plant of the Central Gas Produc tion Company the other the plant of the Hurley Gas Company The former plant will have a capacity of around 10,000 gallons per day while the capacity of the latter plant will be about 6,000 gallons

Clay County The Texas Company upon deepening its No 12 on the Martin farm, near Petrolia has developed 12,000,000 cubic feet of gas in a 15 foot sand at 1780 feet

Dallas The name of the North Texas Gas Company has been changed to Municipal Gas Company and its capital stock has been increased from $500,000 to $2,000,000 This is one of the distributing companies supplied by the Lone Star Gas Company Officers of the Munici pal Gas Company are President C B M Kinney Sec retary Treasurer J D McCabe

Hutchinson County A good producer of gas as well as 20 barrels [illegible] the report [illegible] test drilled by H L McGee and [illegible] South Cagle ranch in Section 10 [illegible] was tested after the well was shot at a depth of [illegible] feet

Ithaca The Lone Star Gas Company has agreed to extend its service [illegible] a sufficient number of residents having signed their willingness to be new consumers

Potter County The Greater Amarillo Oil Company has completed a [illegible] gasser on the Ma- terson ranch at a depth of 2485 feet

Ranger—According to report, the Texas Pacific Coal & Oil Company will construct a natural gasoline plant near Caddo on the Veale lease. It is said that the company expects the cost of the plant to come close to $100,000.

San Antonio—It is reported that the Hope Engineering Company of Mount Vernon, Ohio, has been awarded a contract by the Grubstake Investment Company for the construction of a pipe line from this city to production in McMullen County, the line to cover a distance of ninety miles.

Weatherford—The property and business of the Consumers Gas & Fuel Company, supplying this city and Mineral Wells have been purchased by D. A. Upham, an oil operator of the latter place.

WEST VIRGINIA—*Calhoun County*—Bickle Brothers have completed their No. 1 well on the Alda D. Hoffman farm in Center district and report a production of 3,300,000 cubic feet.

Charleston—The Gasoline Recovery Corporation announces that its Engineering and Sales Departments have opened offices at 402 Janet Building in this city. The office is in charge of E. M. Burdette, Vice-President and C. L. Voress, General Manager.

Clarksburg—The annual convention of the West Virginia Oil and Natural Gas Association will be held in this city August 24th. Mr. Edwin Robinson is Secretary of the organization.

Clarksburg—A gas well being drilled by the Simmons-Clemans Company on Big Isaac Creek recently caught fire from a lighted cigarette, destroying equipment to the amount of $4,000. The steel derrick was not destroyed.

Gilmer County—The Philadelphia Gas Company has completed the Lewis Bennett well No. 7347 in Birch district, and reports a production of 134,400 cubic feet.

A production of 1,400,000 cubic feet is estimated from the No. 2 well on the James Bennett farm in DeKalb district. This well was drilled by the Orlando Oil & Gas Company.

Gilmer County—On Bear Fork of Cove Creek, Troy district, the Philadelphia Oil Company has completed a Big Injun sand gasser at No. 3 on H. E. Patton farm.

Harrison County—In Union district, the Gilmer Center Oil Company has now drilled its test on the Abraham Coffindaffer farm into the 50-foot sand and developed a good gas pressure.

Kanawha County—The Owens Bottle Company has completed the R. G. Quarrier No. 1 well in London district. It is a gasser.

Marshall County—In Liberty district, on Hart's run, the Manufacturers Light & Heat Company has drilled a test on the William Gray farm through the Big Injun sand. It is a fair gasser.

Putnam County—The Blackshere Oil & Gas Company completed a good gasser on the tract of the Marmett Coal Mining Company, Bailey Hollow, Poca district. The gas was found at a depth of 1669 feet. The well is estimated good for 4,000,000 cubic feet per day. This company holds leases on a large block of land and will at once drill additional wells.

Ritchie County—The Mary Nutter No. 1 well of the South Penn Oil Company has been tubed and shut in. A test showed a production of 1,100,000 cubic feet of gas.

On Alum Fork of Bone Creek, the Carnegie Natural Gas Company has a Berea grit gasser at a test on the Roy Bee farm.

Ritchie County—In Grant district, near Penboro, the West Virginia Heat & Light Company's test on the Ritchie County Fair Association grounds has completed a small gasser.

In the same district, in the old Goose Creek pool, David French and others have drilled their test on the Anna Adams farm through the Big Injun sand. Is is a gasser good for 2,000,000 cubic feet a day.

In the same district the South Penn Oil Company has a good gasser in the Big Injun sand at a test on the Charles Lowther farm.

Wetzel County—In Center district the Manufacturers' Light & Heat Company has a gasser in the Big Injun sand on the W. T. Knapp farm.

WYOMING—*Greybull*—A pipe line is being constructed by the Midwest-Wyoming Gas Company connecting this city with the Buffalo Basin and Golden Eagle domes. A portion of the line is already completed, this including two 10-inch lines across the Big Horn River and a 14-inch line across the Greybull River. The company has completed a line to its gasoline plant in Salt Creek, and is constructing a 4-inch welded gasoline line between the plant and Casper.

Rawlins—The Ohio Oil Company, it is reported, has completed a gasser having a capacity of 40,000,000 cubic feet in section 31-26-87 of the Mahoney Dome.

FIRST AID WORK

A Novel Method of Instruction in Oil Fields

THE personnel of mine-rescue car No. 1 of the U. S. Bureau of Mines recently gave first aid training to various oil companies operating in California, including the Pacific Oil Company at Taft, the Standard, Associated and Universal Oil Companies, and Belridge Oil Company and General Petroleum Corporation at Lost Hills, Calif. Car No. 4 recently spent several weeks in the oil fields of Oklahoma, training being given at West Tulsa, Sapulpa, Tulsa, and Okmulgee. Classes were held and lectures given for oil workers, boy scouts, and high-school students. At Sapulpa the members of the city fire department were also trained in first aid. Car No. 5 has been conducting training for the Standard Oil Company at Wood River, Illinois, where six training classes were formed. Training has recently been given to the employees of the Indian Refining Co. at Lawrenceville, Ill., and to the student sons and daughters of oil workers in that district. Arrangements have been made to give first aid training to more than 1100 employees of this company.

Never credit luck with the sale you make—diligence is the father of luck

SEPTEMBER

RY

THE NATURAL

GAS INDUSTRY

TRANSPORTATION GASOLINE PRODUCTION DISTRIBUTION

SUBSCRIPTION $3.00 IN THE U. S.

VOLUME 16
THIS NUMBER 9

CONTENTS FOR SEPTEMBER, 1922

PUBLISHER'S NOTICE

PUBLISHED MONTHLY

[illegible]

BY BILLION RATES In the United States [illegible]

ADVERTISING RATES on request

CORRESPONDENCE IS SOLICITED from all those interested in Natural Gas and related industries

Before Long Distance (Day) Bell Telephone, [illegible]

Office Address Publight Buffalo

All [illegible] Correspondence, Editorial and Advertising Matter to Central Office

PUBLISHED BY

PUBLIGHT PUBLISHING CO.
BUFFALO, N. Y.

[illegible] Brosius President and Editor
Moore A. Brosius, Vice President
A. Louis Brosius, Secretary

[illegible] Entered at Buffalo, New York [illegible] March 1, 1922

CONTENTS OF THIS ISSUE

INDEX OF PAST 1922 ISSUES

Utility Financing

Customer Ownership, Mr. Gilchrist Says, is an Element in Our Business Which Equals and Possibly Overshadows in Importance Any Other Business

[illegible]

[illegible] is an element in our business which is of the greatest interest to me at the present time, [illegible] I believe equals if it does not overshadow in importance any other feature of the [illegible] is customer ownership of public utilities. The great wave which has swept over the [illegible] the past three or four years and which has made [illegible] companies getting a large part [illegible] necessary for plant extension, without [illegible] would have been almost if not quite impossible [illegible] the period of hard financing.

[illegible] which recently reached my desk setting [illegible] the finances of a group [illegible] Central West. I was interest[illegible] following paragraph:

[illegible] characteristic of the public utility [illegible] requirement for additional [illegible] and properties with which [illegible] increasing demands for serv[illegible] capital on reasonable terms [illegible] successfully requires [illegible] structure permitting the issue [illegible] sound investment secur[illegible]

[illegible] more and sets forth seve[illegible] our business which a[illegible] and all of the other [illegible] by the utilities today [illegible] necessary [illegible] prepared to [illegible] which we operate [illegible] public utilities such as the [illegible] telegraph companies have for [illegible] the importance of this [illegible] power gas and electric [illegible] had it forced on our attention [illegible] the last decade [illegible] while it has [illegible] the beginning it is during the past [illegible] growth [illegible] our business has [illegible] the most important [illegible] that unless we can [illegible] bringing in more and [illegible] reach a point where [illegible] must be greatly cur[illegible] this feature of our [illegible] we should have no opportunity to [illegible] the people we serve as the ordinary business [illegible] no matter how well managed it may be with regard to the capital requirements of the ordinary business has very little consideration [illegible] requirements of the utilities.

We cannot too often [illegible] the fact that whereas mercantile businesses turn their capital from three to eight times per year and can generally speaking accumulate from the profits of the business sufficient capital to finance growth, we in the utilities business cannot turn our capital on the average more than once in four or five years, and this being the case it never will be possible [illegible] of more securities.

People who never know [illegible] its out for more money [illegible] enough about the business [illegible] in due to some reason [illegible] ultimately lead to disaster [illegible] has undoubtedly been the cause [illegible] bankers and [illegible] there was something unusual [illegible] the utility business whereas the facts are that the [illegible] of companies [illegible] earning more capital is simply [illegible] of the growth of the business.

If it were possible for a [illegible] and decline to take on more [illegible] a situation where we would be [illegible] because [illegible] necessary to acquire new capital but we [illegible] all of these [illegible] the [illegible] and attention [illegible] the [illegible] small [illegible] from the actual growth [illegible] resulted from the increased [illegible] the many [illegible] companies appearing [illegible] all the [illegible]

Let us do a little figuring [illegible] the next ten years [illegible] much new capital as [illegible] the property which now has [illegible]

Turn to this. Your wife's judgment when in doubt

AROUND THE BELT

New Wells, New Pipe Lines, New Contracts, Additions and Extensions. A Fund of Valuable News Gathered for the Journal Through Many Sources.

TRADE PERSONALS

[illegible] has been elected President of the [illegible] Refining Company, a subsidiary of H[illegible] & Company, Chicago.

[illegible] Railroad Commission of [illegible] having charge of oil and gas supervision in the [illegible] candidate for U. S. Senator on the Demo[illegible] He will run in opposition to James [illegible] in the primaries.

[illegible] Vice President and General Manager [illegible] Gas & Electric Company, has been elected [illegible] of the newly organized Oklahoma State Cham[illegible] Commerce.

[illegible] new member on the sales staff of [illegible] Department of H. M. Byllesby & Company [illegible] York City.

[illegible] Ray S. [illegible] has resigned from his post as Man[illegible] Rawlins Springs Gas Company, which he [illegible] the past six years, in order to accept a [illegible] with a Wyoming corporation.

[illegible] Electrical Operating Engineer of [illegible] Gas & Electric Company, has been elected [illegible] Engineers Club of Louisville. The [illegible] National Association of En[illegible] will be held at Louisville in September.

DECEASED

[illegible] Frank W. [illegible], senior partner of Henry L. [illegible] and Vice President of the Cities [illegible] died July [illegible] at his home [illegible] New York. Mr. [illegible] was [illegible] at the time of his death.

[illegible] Meek, Local Manager for the West Vir[illegible] Mary [illegible] Gas Company, Kingwood, West Va[illegible] died [illegible] at the age of [illegible] years.

INCORPORATED

[illegible] The Colorado Shale Gas[illegible] has been incorporated with a capital [illegible] Those interested in the venture [illegible] Mills K. Mills and Elbin S. Porter.

WEST VIRGINIA, [illegible]. The Earth Oil & Gas Company has been incorporated here with a capitalization of $[illegible]. The incorporators are Lawrence [illegible], William H. Hearne, Thomas K. Hearne of Wheeling and Lee A. Wa[illegible] of Lakewood, Ohio.

PER CUBIC FOOT—RATES

MISSOURI, [illegible]. The Kansas City Gas Company has [illegible] to increase its rates from 80 to 85 cents per thousand in this city.

[illegible] The Miami County Gas Company was [illegible] by the Public Service Commission [illegible] rates [illegible] cents per thousand. The company held that the reduction was [illegible] and submitted a new [illegible] agreement with the local [illegible]. [illegible] agreeable to the Public Service Commission, an application for a writ of mandamus [illegible] the Commission in Supreme Court to compel the gas company to carry out the original orders.

[illegible] The State Public Service Commission has granted the Wells City & Carterville Gas Company permission [illegible] rates seven cents per thousand. [illegible] a like increase made by the supplying companies.

WEST VIRGINIA, [illegible]. The Natural Gas Company of West Virginia has applied to the Public Service [illegible] increase its rates. The ra[illegible] collected are [illegible] thousand less a discount [illegible] a gas [illegible] rate of [illegible] cents per [illegible] and [illegible] cents for [illegible].

[illegible] passenger [illegible] interested communities [illegible] rate of [illegible] cents for the [illegible] for the next [illegible] the next [illegible] cubic feet [illegible] and beyond the [illegible] also [illegible] a [illegible] at the [illegible] The [illegible] also will be [illegible].

[illegible] three [illegible] and other [illegible] apartment buildings [illegible] and similar [illegible] the [illegible] and

Learn this: Something new and useful every day

OCTOBER

GAS TRY

Progressive Gas Companies Start Conservation in the Field.

Cooper Four-cycle

ite

MT. VERNON OHIO

Gas Engineers and Builders CO.

INDEX CONTINUED

FROM THE EDITORIAL MAIL BAG

GAS FILM RELEASED

THE United States Bureau of Mines has announced that "The Story of Natural Gas," produced in co-operation with the Natural Gas Association of America, is now ready for distribution. The film shows the various steps in the development and utilization of natural gas supply, beginning with the drilling of a gas well to the delivery of the gas to the consumer. The picture is interesting and has splendid educational value.

Copies of this picture are available for loan without charge to societies and educational and other institutions, for educational purposes. Requests for the loan of the film should be addressed to the United States Bureau of Mines, 4800 Forbes Street, Pittsburgh, Pa.

CANADIAN NATURAL GAS MEETING

THE Natural Gas and Petroleum Association of Canada held what is reported to have been the most successful annual convention in its history at the Hotel Clifton, Niagara Falls, Ont., on August 31 and September 1. This was the fourth annual convention, the association having been organized in 1919.

At the business session on the afternoon of August 31, reports were received from the various officers and committees. The report of Secretary S. A. Morse showed the association to be in a satisfactory financial position. Reports were presented for the board of directors by P. S. Coate of Chatham and for the laws and legislation committee by H. R. Davis of Buffalo, N. Y.

These reports indicated that the year's work had principally concerned the new legislation in Ontario respecting the natural gas industry, under which the Natural Gas Referee was succeeded by a Board of Reference, comprising three members. Both consumers and producers are represented on this board, the natural gas representatives being Charles E. Steele, President of the Association. The natural gas interests generally regarded the new Natural Gas Act as difficult to operate, but the hope was expressed that the next session of the Ontario Legislature would put through amendments to make it more workable.

Mr. D. A. Coste of Niagara Falls presented the report of the nominating committee, which recommended the re-election of the officers and directors, as follows:

President, Charles E. Steele, Sterling Gas Co., Port Colborne, Ont.; Vice-Presidents, A. M. McQueen, Imperial Oil, Ltd., Toronto, Ont., and P. S. Coate, Chatham Gas Co., Chatham, Ont.; Secretary-Treasurer, S. A. Morse, Union Natural Gas Co., Chatham, Ont.; Directors, Perry A. Little, Buffalo, N. Y.; R. L. Pattison, Chatham, Ont.; H. B. Pearson, Calgary, Alta.; H. W. Braden, Brantford, Ont.; Gordon D. Wickett, Windsor, Ont.; E. P. Rowe, Toronto, Ont.

The recommendation was unanimously adopted. President Steele has held that office since the inception of the Association, in June, 1919.

Windsor, Ontario, was selected as the place of the 1923 convention, the exact date to be determined by the executive.

The first morning of the meeting was spent by the delegates in sight-seeing trips by motor, or on the Lewiston golf course as guests of Mr. D. A. Coste.

At the opening session, President Steele in his presidential address expressed the hope that the new Natural Gas Board of Reference would do better work than he had at first anticipated when invited to become a member. He spoke in approving terms of his colleagues, Chairman D. O. Ellis and Mr. J. W. Ward, the consumers' representative.

C. C. Dean of Imperial Oil, Ltd., gave an interesting paper on "Refining of Crude Oil."

In "The Consumers' View Point," Mr. H. S. Rowley of the Dominion Natural Gas Co. urged that company representatives make an earnest effort to appreciate the consumers' attitude. Following the paper a dramatic interlude was furnished by Reg. Thayer, who, taking by turns the roles of indifferent clerk, angry customer and conciliatory manager, showed how a customer should and should not be handled.

"Natural Gas Distribution Matters" were discussed in a paper by R. B. Kilpatrick of the Windsor Gas Co.; while in "The Conservation Problem," H. R. Davis, General Manager of the Dominion Natural Gas Co., urged that the practical interests of the companies and the consumers be carefully considered in working out conservation policies.

In the ensuing discussion, F. W. James, General Manager of the Union Gas Co., urged the substitution of the term "mineral gas" for "natural gas." The latter had, he held, done much to inculcate in the public mind the false idea that "natural gas" was a product natural in the same sense as air, water and sunshine and to the same extent free to all.

The fourth annual banquet, held on the evening of the first convention day in the Hotel Clifton ban-

Getting ready to will never get it done.

A Matter of Service

Teaching the Correct Utilization of Natural Gas

[illegible] WARREN
[illegible] Peoples Natural Gas Company

Educational Department of The Peoples Natural Gas Company, Pittsburgh, Pa., was organized in June, 1921. It was organized for the benefit of the consumer, and every effort is made to teach the correct utilization of natural gas in the home and to create good fellowship between the company and the consumer.

Paper advertising, while it has its advantages, does not make the appeal to the consumer that personal service does. In fact, many housewives are too busy to read advertisements in the daily papers, or circulars. The interests of the producer and of the consumer are identical. The greater the measure of satisfactory service to the consumer, the greater the interest of the public in the welfare of the utility, and realizes, as it never has before, the value of public cooperation and support.

A house to house campaign would be impractical so we have the women's clubs, civic organizations and church organizations as the only logical means of reaching the people. Women's clubs are an excellent means of spreading information. However, a limited number of women are thus brought in contact with the results of the educational work. Much more time has been spent in teaching the boys principally school child. By teaching the child, the education is not only being educated but correct information on the subject of utilization is being put into every home in the community. It is a very rare child who does not talk at home about what he has been particularly taught in something different from regular routine.

The Superintendent of Public Instruction saw not only the pedagogic but also the economic value of the work and gave permission, with his recommendation, to work into any public school of Allegheny County. An interview with Dr. Finnegan heads of departments of Geography, Science, Civics and Economics were met and these gave promise of cooperation. The Director of Geography has incorporated Gas, Its Use and Conservation, in her courses of study and all teachers of the fourth and higher grades in the state will be required to present it during the coming year.

During the past year some time has been spent in the city of Altoona, Pa. Wonderful cooperation was extended by the Superintendent of the Altoona public schools, who recommended, by letter, the work to the principals and asked their hearty cooperation. The principals however displayed a certain amount of skepticism about the interest of the child in the subject and they felt that their interest could not be held over thirty minutes. In one instance, in particular, discussion in the eighth grade lasted one hour and forty-five minutes and the writer was recalled the third time to answer questions of the children brought up by the "follow up" work of the teacher.

Excepting in a few cases, the educational work is not carried below the fourth grade and the length of period varies from thirty minutes to an hour and one half. The subject matter is the same for all grades but the detail which is used in working out the subject depends upon the age and the intellectuality of the children.

Upon request the subject for discussion is not announced and the question, "What did your mother use in cooking your breakfast or lunch," immediately sets the child to wondering and thinking. The Socratic, or question and answer method of teaching is used entirely in the work. This method keeps the child alert, his mind active, and gives him something to do to say nothing of keeping the instructor on the alert and ready for any question that comes up.

Some teacher in each building will usually ask, "Does not this work get monotonous saying the same thing over so many times a day?" Monotonous? No! Interesting? Yes! very. The same thing is not said at every meeting of which there are sometimes twenty a week but the same information is left with the children. The blackboard is used extensively for a sketch, however crude, conveys ideas to the mind of the child far better than verbal descriptions.

[illegible] interesting [illegible] "What did your mother use in cooking your breakfast?" the answer to NG is invariably given. By a series of questions about other things the fact that gas is a family name is brought out; also in this family there are two brothers, Natural and Manufactured, one made by nature and coming from the ground and the other made by man and most of it made from coal. Some time is taken to describe the discovery of natural gas. Very simply and you might say crudely the various operations of the utility are followed. First the origin of the industry, second the

One of the best things a salesman can learn is how to make a long story short

AROUND THE BELT

New Wells, New Pipe Lines, New Contracts, Additions and Extensions. A Feast of Valuable News Gathered for the Journal Through Many Sources.

TRADE PERSONALS

n D. C. Treasurer of the Oil Well Supply Com ittsburgh, on August 25th was tendered a dinner officers of the company, in honor of the complet Mr. Brown's thirty fifth year of service with the n

r. F. S. of the Chatham Gas Company, Chatham the annual convention of the Natural Gas and um Association of Canada, was re elected a Vice nt of the organization

ables Wm. L. is now Superintendent of Produc the Ohio Fuel Supply Company's Sugar Grove Sugar Grove Ohio

of P. M. recently was elected President of the as Appliance Company Washington, D. C.

James H. of Charleston, West Va., was elected resident of the West Virginia Oil & Gas Asso at the recent annual convention of that body at burg West Va.

r. W. B. Pittsburgh Sales Manager of the Oil upply Co. attended the Natural Gas Convention Clarksburg, W. Va.

and L. V. of the Union and Dominion Natural ercts of Ontario Canada has been visiting the ls of the United States

s. Carey, has been appointed Chief Inspector of o Fuel Supply Company with headquarters at ns Ohio

ssen A. M. of Imperial Oil Ltd., Toronto, as re elected a Vice President of the Natural Gas troleum Association of Canada at the recent an vention of that organization

r. E. E. has been appointed geologist of the Em & Gas Company, with Southern Oklahoma as tory as his field of operations

r. S. A. of the Union Natural Gas Company, n Ont. was re elected Secretary Treasurer of ural Gas and Petroleum Association of Canada recent annual meeting of that body

nson, B. F. of Clarksburg, West. Va., at the convention of the West Virginia Oil and Gas As was elected President of the organization

nson Edwin, has been re elected Secretary Treas the West Virginia Oil and Gas Association

Sargent E. E., has been appointed Superintendent of the Oil Division of the Ohio Fuel Supply Company at Greendale Ohio

Sievers, E. G. has resigned from his connection with the U. S. Geological Survey and is now engaged in va u ation work on oil and gas properties for the Bureau of Internal Revenue

Steele Charles E. of the Sterling Gas Company, Port Colborne, Ont. has been re elected President of the Natural Gas and Petroleum Association of Canada

Todd E. M. has resigned as Purchasing Agent of the Owen Osage Oil & Gas Company, Caney, Kan., so that he might re enter college and finish his course as min ing engineer. Mr. Todd's college course was interrupted in 1917 when he went to France with the A. E. F.

Wheeler, Glenn has resigned from his post as Super intendent of the Oil Division of the Greendale, Ohio, division of the Ohio Fuel Supply Company

Wood, Edwin D., of the Louisville Gas & Electric Company, Louisville Ky. has been elected President of the Exchange Club of that city

DECEASED

Schwarm, Charles A. General Superintendent of the Gas Division of the Arkansas Natural Gas Company, died recently in Shreveport, La.

INCORPORATED

MONTANA *Great Falls* The Montana Sweet Grass Oil & Gas Company has been incorporated with a capital stock of $1,000,000. Those named as incorpor ators are George T. Hansen Salt Lake City, Utah Frank Frantz T. Lily B. O. Lyons Denver Col. and Donald K. Woods M. D. Great Falls, Mont.

TEXAS *Eastland* The Eastland County Gas Com pany has been chartered. Those named as incorporators being M. T. Adams E. R. Baker and H. S. Garrett

WEST VIRGINIA *Charleston* The West View Oil & Gas Company has been incorporated with a capital stock of $50,000. For the purpose of exploiting oil and gas lands. The incorporators are J. A. Tucker J. F. Parks, and J. E. Stout of Clarksburg W. R. Smith of Weston and W. T. Warren of Roanoke. The company's chief activities are said will be in Doddridge County

Mix a little heart as well as head with your business

and will be operated in connection with the com
s carbon plant

ne ton The Armistead Syndicate drilled into a
,000 cubic feet of gas in its test in section 23-19 11,
er Parish

rcepport An extension of ten miles to the gas line
e Bethany Oil & Gas Company insures an increase
,000,000 cubic feet to the gas available for distribu
in this city

ster Parish Webb and associates have completed
l on the Merritt tract and have a well with an esti
d capacity of 80,000,000 cubic feet of dry gas from
than two feet in the sand at 2,558 feet This loca
is in section 13 21 10

ster Parish The Woodley Petroleum Company in
n 2 22 10 has completed its No 1 on the Campbell
This location is fourteen miles west of Haynes
The well was shut in with 10,000,000 cubic feet
s and some oil

NSOLRI *Kansas* A bond issue of $2,927,000,
ed by first mortgage, has been arranged for by the
as City Gas Company The funds will be employed
he up maturing obligations and on plant improve
s

DNIANA *Miles City* A gas pipe line from this
o the Glendive Baker field is being planned by the
hwest Public Utilities Company The proposed line
be of 10 inch pipe, and when completed will cost
$1,500,000

HO *Medina County* The Wiser Oil Company
completed a 2,000,000-cubic foot gas well on the
n Gessinger farm, and an 80,000-cubic foot gasser
e Law Brothers lease

shington In Warren Township the Pure Oil Co
completed its second test well on the L Martin
through the Keener and Injun sands and it is pro
g 600,000 cubic feet per day

LAHOMA *Amarillo* It is reported that a gaso
recovery plant is to be constructed in this field by
ts who are organizing a company F J Storm,
was formerly with the Amarillo Gas Company will
neral Manager of the new concern and with him
be associated L L Hastings, who was previously
resident for the Lower Gasoline Company Prop
ment of the city has been purchased, and machinery
other plant equipment has been contracted for, it
d

ma A gasoline plant it is reported, is to be
rected near this city by the Amerada Petroleum
oration While it is planned to build the plant so
its capacity may be increased, the initial installation
capable up to 4,500,000 cubic feet of gas

rtlesville A six inch gas line is being constructed
e Sewalter Gas Company of this city to the new gas
at Okesa, six miles distant

Beaston The Skelly Oil Company is installing a gaso
line recovery plant near this city, the machinery is being
furnished by the Bessemer Gas Engine Company The
plant is to have a capacity of 2,000,000 cubic feet per
day

Creek County The Prairie Oil & Gas Company has
shut in 24,000,000 cubic feet of gas in its No 5 on the
Shoals lease, section 33-16 9, from sand at 2,000 45 feet

The Phillips Petroleum Company has completed a
large gasser on No 1 on the Hawkins lease, section
4 15 9

The Prairie Oil & Gas Company in No 6 on the
Shoals lease is reported to have shut in 25,000,000 feet
of gas at 2,000 61 feet

A 4,000,000 cubic foot well has been completed by
Frank Billingslea and associates in their No 1 on the
Daniel lease, section 11 14 8 Production was reached
at 2,000 feet

Duncan The Lone Star Gas Company is construct-
ing two compressor plants near this city, and announces
that the plants will soon be ready to put into commis
sion

Grady County The Iowa Oil & Refining Company
has completed a very large gasser on a wildcat lease in
this county The gas was found at a depth of 1,107 feet,
64 feet in the sand

Kiowa A franchise to furnish gas in this city is be
ing sought by Okmulgee interests The gas is available
from two wells nine miles out of the city

Okfuskee County The Kansas & Gulf Company in
its No 1 on the Barnett property section 9 11 11, re
ports a small gasser from sand at 1,002 05 feet

The Foster Oil Company in No 1 on the Pigeon lease,
Midwest Pool, section 2 10 9 is a 10,000,000 foot gasser
at a depth of 1,005 85 feet The company also reports
an estimated production of 8,000,000 cubic feet in No
2 on the same lease at 1,007 feet

Tulsa County Duffield and associates have completed
a 1,000,000 foot gasser in No 4 on the Johnson tract
section 8 21 13, at a depth of 1,070 feet

The Bubble Oil Company in No 15 on the Panther
lease section 8 21 13 has completed a well with an
estimated production of 1,500,000 cubic feet per day

The Oilkem Oil Company drilling in section 2 22 2
in the Osage Indian Reservation reports 2,500,000 cubic
feet of gas at 1,748 feet

Hanesville Members of the town council are interest
ing themselves in a project to bring natural gas service
to this city and the matter has been taken up with the
Lone Star Gas Company a branch of whose mains may
be reached at a great distance from the city

PENNSYLVANIA *Westmoreland County* Near New
Freeport, in Veggel Township the Crescent Oil & Gas

Co.'s initial test well on the William Clark farm is completed in the Gordon sand at a depth of 3,144 feet and is producing 1,000,000 feet of gas per day.

Pittsburgh—In the 28th Ward Thomas McDermott drilled in his test on the Walters' heirs' lot, and reports a gasser good for 1,000,000 cubic feet.

Pittsburgh—In a study of the products of combustion from gas stoves being made by the experiment station of the Bureau of Mines by G. W. Jones, explosives chemist, and L. B. Barger, laboratory assistant, the testing of seven different types of gas stoves has been completed. A resume of the work shows that 1.7 per cent. carbon monoxide is the maximum amount produced in a 1,000 cubic foot chamber at the time the flame extinguishes from lack of oxygen. This is a fairly large yield of carbon monoxide based on the amount of natural gas used, 20 cubic feet of gas giving 6 cubic feet of carbon monoxide. It was definitely determined that an abundant supply of air to the flame, either yellow or blue, gives no carbon monoxide and that aldehyde vapors are always accompanied by carbon monoxide. A report covering the results of this investigation is being written for publication.

Tidioute—Chase & Clinger have completed a good gasser on the Wheelock farm.

TEXAS—*Brazos*—The Lone Star Gas Company, it is reported, is erecting a gasoline absorption plant near this city.

Corpus Christi—A natural gas line is in process of construction from White Point fields across the bay to this city.

The W. B. Pearson Construction Company of Houston is asking for a natural gas franchise to operate in this city.

Erath County—Paschal & Triplett of Cisco, have drilled in a large gasser in No. 2 on the Laney lease, two miles west of Duffau.

Kingsville—No. 1 well on the Hart property drilled by the Frances Oil Company has blown itself in and is reported to be making about 50,000,000 cubic feet of gas.

Montague County—The Petroleum Producing Company in No. 1 on the Maddox lease is shut down with an estimated showing of 30,000,000 cubic feet of gas at a depth of 789 feet.

Potter County—No. 1 well on the Masterson lease drilled by Montgomery and associates developed a large volume of gas at 2,605 feet. This was mudded off and the well is being drilled deeper.

Richland—The Lone Star Gas Company is piping this city for natural gas service, and expects to have the entire distribution system ready for service within the next few weeks.

Stephens County—The Roxana Petroleum Company in No. 2 on the Norton tract has a large gasser at 3,245 feet.

Webb County—The Border Gas Company of Laredo is taking gas from the No. 2 well of the Caroline—Texas Company which is said to have a production of 65,000,000 cubic feet per day.

Wortham—The Lone Star Gas Company has completed the work of installing a distributing system in this city, and gas will shortly be at the disposal of Wortham residents.

Young County—The Penn Cities-McGarr interests have indications for a large gasser in their No. 2 on the Herron property.

No. 1 on the Scott lease, South Bend townsite, drilled by the Eureka Producing Company and the Hobbe-Haskell interests, came in at 3,485 feet with a large production of gas, as well as considerable oil.

WEST VIRGINIA—*Boone County*—A production of 160,000 cubic feet of gas is reported from well No. 2 on the Boone-Kanawha land and mining company tract in Peytona district.

Calhoun County—In Sherman district, Godfrey L. Cabot has a gasser in the Big Injun sand at a test on the L. S. Penniger farm.

Calhoun County—On Anna Moriah Creek, Sheridan district, B. J. Crowley has completed his No. 1 on the William and George Cooper farm and have a light gasser and a showing for about a two-barrel oil well in the salt and Berea sands.

In Sherman district, the South Penn Oil Company's test on the W. T. Weaver farm is dry in the Injun sand.

Doddridge County—In Greenbrier district, the Continental Oil & Gas Company's test on the F. L. Day farm is through all sands and showing for a light gasser.

Gilmer County—The Carnegie Gas Company has completed the Hewlett heirs' No. 1 well and reports a production of 700,000 cubic feet of gas. It is an old well drilled deeper, in Center district.

In Troy District the Hope Construction & Refining Company test on the H. I. Allman form is a gasser in the Big Injun sand.

In the same district the company also has drilled a test on the Allman farm, which is reported a gasser in the Big Injun sand.

A gasser is also reported by the Hope Company in Salt sand on the Ella Steinbeck farm, and one on the H. L. Farnsworth farm. Its test on the Hefner farm is dry and abandoned.

In Glenville District the Pittsburg & West Virginia Gas Company has a gasser in the Big Injun sand on the Grandville Collins farm.

In Troy District, E. C. McCall & Company's test on the W. B. Maxwell farm is a gasser in the Big Injun sand.

The Pittsburgh-West Virginia Gas Co.'s No. 1, on the L. T. Matheny farm, Troy District, is completed in the Gantz sand and is a gasser.

Fortune has wings. It wouldn't get anywhere if it remained on the ground

Hope Natural Gas Co No 1 on the W A Sny m, located on Buck Horn of Horn Creek, is also ed in the Big Injun sand as a gasser

r County The Cole Fork Oil & Gas Company illed in their No 2 well on the Dye lease It is r said to be good for half a million feet

company's No 1 well in this section is said to ing up to 6,000,000 cubic feet per day The y will drill more wells on this same lease

rkalb district the Orland Oil & Gas Company ig Injun gasser at the No 2 on the J G Ben n

Rusmussell and others have completed a large in Center district, in the well on the Warren S lease

ison County In Sardis district, the Vesper Oil Company's test on the W E Gifford farm is a asser in the Gordon sand

ison County In Sardis District the Delva Lex mpany has a gasser in the 50-foot sand at its test Charles Smith farm

ia County A production of 368,640 cubic feet is reported by the Eastern Carbon Company from 2 well on the company's tract of land in Cabin District.

k River, Big Sandy District, the Triumvirate mpany's gasser on the Sarah Young farm has ted and it shows a capacity of 750,000 cubic feet

ia County J B Weir has completed No 95 Sandy district, on the tract of the Falling Rock Coke Company at a depth of 2,000 feet, and a production around 1,500,000 cubic feet

in County The Huntington Development & Gas y it is reported has a production of 800,000 eet in No 1 on the Alexander Atkins lease, district

am Paw district, the Randall Gas Company com- a Gantz sand gasser on the W C Burns farm

in County The Huntington Development & Gas y has completed No 276 on the James Pride r perty, and reports good production The loca n Carroll District

Hall County In Liberty District the Manufac- Light & Heat Company's test on the J S Hager a gasser in the 50 foot sand In the same dis- same company's second test on the Maley Yeater a gasser in the Gordon sand

n County In Union District the Pittsburgh & rginia Gas Company has a salt sand gasser at a the Hall Summersville farm In Grant District, ison Central Oil Company's No 4 on the Omer arm is a gasser in the Maxon

Marshall County In Cameron District, G B Patter son & Company have a Gordon sand gasser on the Mc Clain Phillips farm

Monongalia County In Clay district, J H McDer mott Oil Company has a fifth sand gasser at the No 1 on the S L Chapin farm

Monongalia County In Battelle District, the Pitts burgh & West Virginia Gas Company has a gasser on the Jasper Shriver farm

In Clay District the Clay District Oil & Gas Com pany has a fifth sand gasser on the Lucy Stull farm

Montgomery The Montgomery Gas Company has ap plied to the Public Service Commission for permission to discontinue service to industrial consumers, owing to depletion of its supply

Morgantown It is reported that W E Lanham, on whose property in this city a good gasser was drilled in a short time ago at a depth of 102 feet, will make an attempt to commercialize the supply which he does not utilize in his own home Mr Lanham, it is said, is contemplating arranging for a supply of meters to be installed in the homes of twelve to fourteen neighbors who wish to become gas users

Pleasants County In Lafayette district, the Walnut Run Oil Company's No 2 on the W C Dotson farm has been completed in the Big Injun sand at a depth of 1,850 feet and is dry in all sands

In McKim district, the Williams Drilling Company had similar luck at their No 14 on the J A Saunecker farm, completed in the Cow Run sand

Putnam County On the Kanawha River, Pratania district, the Owens Bottle & Machine Company has a fair gasser on the Heger property

In Poca district, the Blackshire Oil & Gas Com pany have completed their test on the Marmet Coal & Land Company tract in the Big Lime and have a 4,000 000 foot gasser at a total depth of 1,000 feet

Ritchie County The Carnegie Natural Gas Company in its No 2 on the Elliot farm is reported to have drilled in a good gasser in the Big Injun sand

Roane County The United Fuel Gas Company re ports a production of 1,500,000 cubic feet from well No 1272 on the Ellis Gibson tract in Geary District

Roane County The United Fuel Gas Company re ports a production of about 1,000,000 cubic feet of gas from well No 1270 on the Samuel K Wright farm in Geary District The well was to test 1,040 feet and gas was struck in the Keener and Big Injun

Roane County In Geary District the United Fuel Gas Company has a Big Injun sand gasser at a test on the Samuel K Wright farm

Mental ease is a full brother to physical laziness

NOVEMBER

GAS RY

BLOWING GAS AGAINST THE HILL

[illegible]

THE C. & G. COOPER COMPANY
MOUNT VERNON OHIO

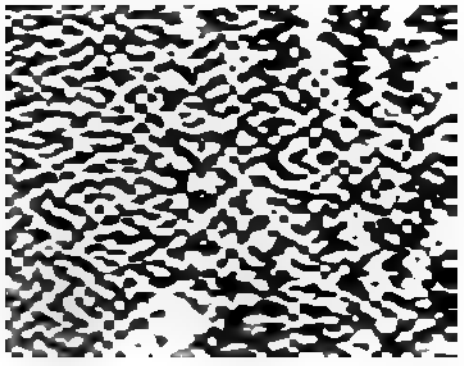

(Concluded from Page 346)

Bituminous Coal production for four weeks ending September 30 was 38 million tons compared with 33 million tons for the same period of last year and production for the calendar year to September 30 was 271 million tons compared to 295 million tons for the first nine months of 1921. Beehive and by-product Coke production during September totaled 2,850 thousand tons compared with 2,333 thousand tons the month before and 1,712 thousand tons in September, 1921

Petroleum production during August was 46 million barrels compared with 47 million barrels the previous month and 41 million barrels a year ago. Stocks of crude oil on the first of September were 265 million barrels, a new high record, compared with 261 million barrels a month before and 179 million barrels a year ago. Consumption of domestic and imported petroleum during August is estimated at 51 million barrels compared with the same consumption the previous month and less than 43 million barrels in August of last year.

New Oil Wells completed during September numbered 2,203 compared with 2,377 for August and 1,275 for September of last year. Of the August wells, 1,709 were producers compared with 952 producers brought in during August, 1921.

INDEX CONTINUED

RESIDENT McMAHON'S ADDRESS

Ohio Gas and Oil Men's Convention

ou cannot see the bright side of a thing, polish the [illegible] Bulletin

n purpose of serving the public I trust there r found and developed out of the wisdom and nce that is available among the members of this ation, some concrete suggestion that will be of to the state and to us in solving the problems ve confronted us and that will be of benefit to the eople of our state our friends, and neighbors ne have so long endeavored to serve and who, after closer to us despite whatever little differences of we may have had than any others

Ohio Gas and Oil Men's Association

JOHN M. GARARD REMINISCES

OHN M GARARD, one of the deans of the natural gas field, we say "one", because in this field there are several deans was called upon at the recent meeting of the Ohio Gas l men, not as an "old man" taken from the shelf time being, but, however, as one of the Old to tell the "old folks" of things they had for- and to tell the young folks stories about their ressts

Garard's remarks were indeed democratic, and r wondering if the recent "democratic land was at all the result of the impression made by easant "democratic" remarks of Mr Garard at ns meeting which occurred just prior to elec

rpublican can be as "democratic" as a democrat, r not he agrees with the principles of the ratic party "Democracy" as represented in the l Mr Garard's friendly and pleasing remarks is tely of the right sort, and could never be object- even among "Republicans" We all like that element that is found in a circle of those ratically inclined, such as are the members of rat natural gas family, so many of whom came "wily positions but have found themselves among the leaders in these more recent days

Garard said

as somewhat taken back when I was called up- one of the old timers, to speak of events that lace in the early years of the oil and gas indus really thought it very presumptuous on the your worthy President to mention my name in nection and I know you will look at the matter milar light when I tell you I was water boy for ree gang of which he was foreman and they r reputation of being the poorest gang in that and then have him get up and say we would ear from some of the old men If he had made tement. You are now hearing from one of the s boys it would have been much more appro-

hing of the ancient vintage my mind goes back s I see in the audience There is F W Craw- ford, who used to dress tools when I was a boy in knee pants and played about the derrick, and when he came to work, nearly always two or three hours late, his excuse was that a young lady from out of town was visiting at Emlenton and he had been out later than he expected This caused his brother George to work over time and he has been at it ever since

Then there is old man Hagan of Corning Ohio My first recollection of him was riding around over the oil country with him in a hunk wagon and holding the horses while he was pretending to visit the wells We frequently stopped where there were no derricks in sight, but his excuse for stopping at these places was that he wanted to leave some word for one of his teamsters This to my youthful and innocent mind was a satisfactory explanation but I now look back and fully realize how Oliver pulled the wool over my unsophisticated eyes

Another of the old patriarchs is my dear dear old friend Martin Dale who used to have charge of the Northwestern Ohio Natural Gas Company at Toledo My first acquaintance with him was away back about 1888 or thereabouts I remember I was wearing my first long pants, in fact my first tailor made suit made by the leading tailor of Emlenton Pa and it must have been all right, as Fred Crawford Lem Neely and many of the other old timers still patronize him

Still another of the ancient vintage is Presley W Lupher, President of The Logan Gas & Fuel Company, who was the right hand man of the dean of all, the late T N Barnsdall, whom we all knew and loved, and it was always said and never disputed that his word was as good as his bond, and no human was ever allowed to suffer from hunger if T N knew it

I shall not dwell on the early years of my association with Presley for they were at times stormy on account of supply and demand for gas but conditions changed many years ago and I now count him as one of my good friends

I see one of the oldest or at least he seems so to me men in the gas business John Carrin I will never forget him for he was best to me When he was married I happened to be in town that morning and when he drew up to the church door I helped him out of his hack and held him until [illegible] came out As a matter of course he wanted to show off in front of his bride and he went through all of his pockets trying to find a dime as that was the just max tip at that time but he could find nothing less than a silver dollar which he reluctantly handed me and I never meet him that he does not ask me for the change and that is one of the reasons I try to avoid him

I might continue along this line for an indefinite period but I am going to tell you of some of the hardships the early oil and gas man had to meet In the early days extra fittings extra heavy fittings were an unheard of quantity we never heard of anything of that kind When I am talking of the "early days" I

are they who were not satisfied to let well enough alone. All the world is today, we owe to them.—Shur-on Chronicle.

[illegible] in the well. One of them came down to me and he said, "I thought that Greene county had some [illegible] people," he says, "but you are four of the [illegible] fools that I ever saw." And I guess he was right.

I want to tell you a little experience I had at Mt. Morris in the early days. We were all in a little group and we got up a little organization called "The Social [illegible]." I wasn't married at that time, so I had a right [illegible]. And we had a dance every two weeks. We would send over to Morgantown and get the orchestra [illegible] over and play. The orchestra consisted of [illegible] fiddles, I think.

There were two or three of them had a dress suit. I never owned one until that time. So I decided that I wanted to look as fine as the rest of them and I ordered a dress suit. And on the night of our wonderful [illegible] I had on my dress suit, and at that time we had no long distance telephones. But we could telephone to Waynesburg. There the message would be [illegible]. Word came to me that they wanted me at the telephone. Very foolishly, I was all dressed for the party. I went over to talk on the telephone. Mike and John McCord were there, two of the best men I ever knew. They were brothers, great big husky [illegible]. The telephone was in the bar room. There was no bar. That is, they didn't sell anything, while you could get plenty of it at the distillery. I was talking on the telephone and John and Mike came up behind me and claimed to be admiring my coat, but in reality one of them took hold of each side of my dress coat and simply tore the coat off me. Mike said, "[illegible] if you don't have any more sense than to come to these places with that kind of a coat, that is the result."

[illegible] fortunately, they were doing some drilling for the company that I represented, so I went over to Morgantown to the highest priced tailor we had in that county and I got two suits of clothes and an overcoat and had the bill sent to [illegible] and I never heard of it afterwards. (Laughter.) But they had to do that because I had something to do with the contract.

I must have one more little statement to make and then I am going to take no more of your time. This is from Corrinstown, Ponetown, West Virginia. He never has been there, but he guess he used to go there a great deal.

I went to Ponetown on my first visit to Mrs. Wilson. Mrs. Wilson kept the hotel. Wilson, her husband, ran a little mill. He always ate with his hat on. Never took his hat off.

The first night I was there for supper, you had to go out through the kitchen to get to the dining room, and in those days they made apple jack in that country, lots of it, and as I was going into the kitchen there was a little shelf there, and Mrs. Wilson says, "There is a bottle of apple jack, take a drink, it will give you an appetite for supper." I said, "No, thank you, Mrs. Wilson, I don't drink." She says, "What! Don't drink! My goodness, you never have any fun, do you?"

Well, now, here is one thing that makes me swell out with a great deal of pride.

Mr. Hukill, the man I was with, wanted to take up a body of land around Homeland, and it is unfortunate that he didn't keep it, because it turned out to be wonderful territory, and it is producing yet, isn't it, John?

I went up there on the first day of July. It was harvest time. Well, I would talk to the farmers, and they would not lease. They would like to lease, but they hadn't time, they kept on with their work and I walked around with the man that was cradling wheat and with the mowing machine, but I couldn't do any good. So on the second day of July it rained, rained, rained.

Mr. Wilson says, "You'll see one h[illegible] of a time in Ponetown tomorrow." He says, "Cannon Shriver is running full time now making apple jack. One of the tenants is making it," he says. "You will see a wonderful time."

Well, I went to Cannon Shriver. He was a notary public. I said, "Cannon, you don't know a man only fifteen minutes and you take him by his first name. If you called him Mister with the last name, he would not talk to you at all." I said, "Cannon, they tell me that there will be [illegible] people here today, and I want to lease the farms. Now, the customary price is fifty cents for acknowledging leases. For every man that you bring to the store, I will give you a dollar to take his acknowledgment."

I started in about eight o'clock, and I stayed on that bench until after nine o'clock that night, and all I had to eat was a few crackers, and I wrote leases for [illegible] acres, and it has never been equaled, or at least I never have found anybody doing it. Some of the farms were [illegible] acres, [illegible] some of them were six hundred. But I want to tell you right now that I wear the leasing business. (Hearty applause.)

HENRY L. DOHERTY DISCUSSES GAS SITUATION

WHEN the people [illegible] the state [illegible] instead of expecting the [illegible] to legislate then and [illegible] the benefit of intelligent legislation [illegible] Henry L. Doherty, head of [illegible] Service Company of the Southwest, [illegible] Association of Railway and Utility Commissioners at their annual convention here recently. Mr. Doherty said that the progress [illegible] companies want state regulation [illegible] they do not want [illegible].

[illegible] Mr. Doherty said that [illegible] are to blame for the fact that a large part of our citizens

A. G. A. Convention

1922 Convention of American Gas Association Presented Many Features of Interest to the Natural Gas Industry — Of These Several Are Reprinted Here

LEARNING FROM OTHERS

is no disgrace whatsoever to acknowledge that in certain lines others may have through earlier, or perhaps even broader experience in certain directions learned more of the way things can done to advantage, than have those who have ing later on, and it is upon this general principle quote to our natural gas readers from addresses d before the American Gas Association at its held in Atlantic City in October, a gas field in the natural

of the matter we quote has a direct bearing upon as in the natural gas field as they exist today atter has a bearing upon the situation as it exists companies that are no longer depending entirely ural gas for their supply, and to still other gas companies that will be finding a part of their manufactured product, either taken from coke and purified and then mixed with natural gas, from the company's own gas manufacturing d mixed with natural gas The following in cer anges have been quoted in full, in others they somewhat briefed These matters taken from of the American Gas Association Convention the address of the President, "Publicity and ing," "Sales Stimulation," "Selling the Gas Bill," Meter Many gas companies in the "manu- " held conduct gas appliance sales departments

re also reprinting from the *Manufactured Gas* Magazine for November "Manufactured Gas s" These will be of interest to many of our gas men The Editor

THE CONVENTION

registrations ran over 2(40), the largest attendance ever and none at any time has been more representative Gas men literally *flocked* in They came from all directions and it was notably in evidence This to our mind that the Western man cares to come East for ge of scene and atmosphere that is his for the Some have said that the Westerner will not to these conventions unless held in the West as in the East Such might be the case under nditions, but who does not like an entire change at least once a year, and surely such was found at Atlantic City by the gas folk who attended this A G A convention of 1922

Atlantic City is *neutral ground*, it is not the East and it is not the West not an Eastern city nor a Western City, it's "no man's land," it belongs to the Westerner and to the Easterner, a peaceful "*no man's land*", however At Atlantic City it was found that more than elsewhere attended the meetings and *examined the exhibits*, thus making the hearts of the exhibitors glad

It was claimed by many that in Chicago or New York, where there are an infinite number of distractions, "*the Call of the Wilds*" as it were, is so strong, that many a heart responds

The air of the seaside was bracing and kept the men all fit and in trim, the *lazy feeling* man of other convention locations was hardly to be found There was the atmosphere of "*Make it Snappy*" in everybody, and every thought and action

Many were heard to say that either regularly to meet at Atlantic City, or two years there and one year West, thus two years in the East where at least two thirds of the membership is found, and one year West, a turn about of two to one, with Atlantic City the regular Eastern meeting spot, would ensure large attendance at all meetings

Atlantic City having hotel accommodations unequalled, two great piers, and a personality and environment not found elsewhere, challenges the world as a meeting place

The ozone in the sea atmosphere of Atlantic City did its part to make profitable the convention sessions It was a great relief to have opportunity to fill one's lungs with good pure air at intervals instead of remaining indoors day and evening as has been the case with many where in the recent past the living, the convention sessions and the exhibition were all in the same building

The walks and rides on the Boardwalk were much enjoyed, as was likewise the sailing that various "parties" took advantage of

The ladies in attendance were frequently seen in the shops along the Boardwalk various of these ladies not having before visited Atlantic City found the shops of especial interest

The Steel Pier presents a most favorable opportunity for display, and the Association under its able

ADDRESS OF THE PRESIDENT

American Gas Association

Leaders are ordinary persons with extraordinary determination. —Harry Peck Idea

year's work has been marked by several out-
ng features which deserve mention. Stated
they are:

ore intimate contact with the public established
h the effective use of a large number of news-
publicity outlets

quent talks and illustrated lectures on the gas
es before audiences largely composed of gas
mers, resulting in a clear understanding of the
s function in our domestic and industrial life

employment of experienced newspaper men to
public relations work This is a movement
its infancy, it should be greatly encouraged

selling of securities to customers, which is hav
st beneficial results in bringing about a better
tanding of the fundamentals of the utility busi-

large amount of newspaper advertising con-
l for and used with marked effectiveness by the
number of gas company and appliance makers
history of the industry, illustrating the indus-
ppreciation of this modern form of selling.

continual expansion of state committees on pub-
ity information, with eighteen such committees
ration and their work reaching into 26 states
Union a movement of vital consequence to the
y.

use of motion pictures to carry the gas message
to the public, and it has been carried with great
s.

r quality of the direct-by-mail literature; bet-
ies letters and a quickened commercial sense
has placed the industry on the alert and made
ressive

recognition on the part of our industry that
e in our own employees an excellent medium
tributing information and the training of em
s to properly represent us

e are the "tools," so to speak, that the industry
its disposal There is no apparent necessity
ing new ones If we will continue to recog-
e importance of newspaper and magazine pub-
favorable to the industry and strive to increase
petition of such publicity, if we will continue
paid advertising in greater volume and strive
e it carry more effective commercial and good-
essages, if we will meet the public openly and
rm the facts, by word of mouth, by means of
s and motion pictures if we will do these few
alone, and do them conscientiously and per-
ly, we will forever end misunderstanding and
ce.

ing the past year we have prepared and dis-
d several hundred thousand copies of educa
pamphlets and we will keep this good work up
e we have ample proof of its success We have
rated a new advertising service of most prom-
possibilities, at a time when the industry is
g new advertising history for itself.

SALES STIMULATION

Read before Utilities
BY WILLIAM GOULD
Chairman of 1927 Committee
American Gas Association

IN preparing sales suggestions for every month in the year, it was necessary to have an experienced man with vision broad enough to take into consideration the needs of the smaller companies

As an industry, we advertise and tell the public that ours is a 365¼ day a year business, that we are always on the job, that is, we are always making gas, which is very true, but are we on the job 365¼ days in the year in our Sales Department?

Emphatically No! Now just as emphatically, Why Not? And what are our reasons for saying so? Let us ask ourselves a few questions When do the manufacturers' salesmen have their lay-off or vacation? Answer In the Wintertime Why? Because business is slack at that time Why? Because Gas Companies are not ordering anything Why? Because they are selling very little Why? Because they are not on their jobs 365¼ days a year, and think the Winter is the slack selling time for gas appliances, and the sad truth of the matter is, that it generally proves out as they think, but it also proves to be just as busy a selling season as any other period, if they think it is and want it to be.

Does it just happen that in the companies where the Winter is considered the dull season for appliances, that it is also the poorest for gas output, or is it a natural result? We personally believe it is a natural result, for can we expect our customers to continue to be interested in using appliances, when the gas company has almost ceased sales efforts until the Spring and Summer come again?

The office-force meter readers bill-collectors and the whole works in one endeavor to put across the sale featured, will eventually be the kind of practical co-operation that will develop a company and give the right kind of service to its customers Gas may only be used or sold through appliances consequently the more appliances sold by the entire organization, the bigger the company will grow Every gas company, no matter how small, has a latent selling force in its employees other than salesmen, which if it could be brought to bear on the situation would materially increase the development of that company to amazing proportions Enlist your whole organization in this developing campaign The most important time to speed up sales efforts is to our mind at the time when people are returning from vacations and are getting ready to settle down in preparation for the Winter this is generally in September

In selling our appliances, are we telling the purchasers much about them other than the price? Are

to find a short road to success would make good epitaphs for the vast multitudes of failures

Ancient Art of "Cracking"

Difficulties Encountered in Patenting Cracking Processes and in Protecting Patents Issued — History of Developement of Art of Cracking is Interesting

By FRANK A. HOWARD
(In Part)

s used in the petroleum industry the term "cracking" signifies generally the conversion by decomposition of a heavy or viscous oil of high boiling point into a lighter, free-flowing oil of oiling point

itically, the term "cracking" at the present time ost universally applied to that particular species mposition by which gas oil or fuel oil is con- to yield a substantial percentage of gasoline

ically the art of cracking goes back approxi- ne hundred years, at least This, of course, not modern petroleum industry, which has not had gth of life, but in the allied gas and coal distilla dustries Animal and vegetable oils, waxes, fats ans appear to have been subjected to an operation we should today call "cracking," in the very days of the gas industry, for the purpose pri- t converting them into illuminating and fuel gas as early, various natural bituminous substances, coal shale, lignites, and more rare mineral de which came very near to being solidified petroleum re subjected to destructive distillation, both for duction and for the production of light oil dis The earliest general use of this method of tive distillation for the purpose of causing decom- of complex bitumens into lighter oils appears to been place in connection with the shale and coal oil s in England, where "cracking" processes of this tion were very early utilized to increase the yield ed oil or kerosene

king for this purpose became a standard opera- the petroleum industry soon after it got on its mercially in America, and the process was highly ed in American refineries By the aid of this the supply of refined oil, which was at that time troleum product in greatest demand, was very increased In the case of many crude oils the l kerosene obtained by cracking equalled the yield ral kerosene so that in effect the kerosene pro- was in these instances actually doubled by g

e early years of the present century, when the l for gasoline began to outstrip the demand for e, it was natural that the oil refiner should turn to his prior cracking processes for inspiration and help in solving the new problem The earliest process for cracking to produce gasoline which proved successful on a large commercial scale was that developed by Dr William M Burton and his associates of the Standard Oil Company (Ind) This process was a pressure distillation method the details of which were worked out so successfully by Dr Burton and his associates that within two or three years there were several hundred stills operating according to the method in use, not only by the Indiana Company but by a large number of licensees as well, located in all parts of the United States The success of the process and its widespread use may be attributed not only to its intrinsic merits but also to the circumstances that its details were worked out in such a manner that it fitted into existing refinery processes and organization so perfectly requiring the minimum of special knowledge either in construction or operation, and the minimum change in the accepted refinery practices aside from the pressure distillation itself

The Burton process of course was not the only one which came forward at this time for the subject of increased gasoline supply was one of great importance to the whole industry and refiners as well as chemists, engineers, and outside inventors and scientists of all descriptions, were diligently at work on other processes The historical background of the cracking art, involving as it did not only petroleum refining but the earlier industries of gas manufacture and coal and shale distillation, gave a fertile field in which inventors seeking to improve cracking for the production of gasoline could operate It will be remembered that the Federal Government itself became interested in this matter through the Bureau of Mines, and that much publicity was given to a process known as the Rittman Process the initial work on which was done under the auspices of the Bureau of Mines

It was unfortunate as a fact that in many instances perhaps the [illegible] of instances the inventors and promoters of the various cracking processes which began to clamor for public attention and financial backing very soon after the Burton process became generally established, neither were instances at with or failed to point out the [illegible] of the problem It was believed by most persons not familiar with the details of the industry that cracking was an entirely new phenomenon and [illegible] that the Burton process was the only known means of accomplishing this and that

nd before you have earned, and when you spend, don't spend all you have earned.—The Three Partners.

[illegible]

OLD FIELDS COME BACK

Abandoned Fields to be Redrilled

[illegible]

Accumulation of the Indiana Field

[illegible]

WHEN IN NEW YORK

[illegible]

Woodsfield—The Central Gas Company has completed a good gasser in its test on the Jacob Cecil tract. The gas will be utilized in Woodsfield.

OKLAHOMA—*Bartlesville*—The Empire Gas & Fuel Company reports net earnings for the nine months ending August 31, 1922, available for bond interest and reserves of $8,327,587. Based on current earnings, net for the year ending November 30, 1922, will be approximately $10,500,000.

A gas line from a field fifteen miles distant has been completed and insures the city of an additional daily supply of 20,000,000 cubic feet. The new line is the property of the Smelter Gas Company.

Carter County—The Magnolia Petroleum Company in No. 5 on the Hefner lease, section 27-2s-3w, Fox District, has completed a larger gasser from sand at 2,355-58 feet.

Creek County—The Jomac Oil Company has completed No. 2 on the Cain lease, section 10-16-9, in sand at 2,985-3,002 feet, and reports production of 10,000,000 cubic feet of gas as well as about 120 barrels of oil.

The Prairie Oil & Gas Company got 6,000,000 feet of gas from the Glenn sand at 2,615 feet in No. 1 Henry, section 32-16-9, but has mudded it off and is drilling deeper.

The Waite Phillips Company shut in 5,000,000 feet of gas from 857-869 feet in No. 5 Brown, section 24-16-10.

Grady County—The Carter Oil Company's No. 1 Chandler, section 26-5-8w, at 1,228-1,312 feet, is good for 15,000,000 feet of gas.

Kay County—The Ballentine interests have a 6,000,000-cubic foot gasser from sand at 758-62 in No. 1 on the Wildegrube lease, section 28-27-1e.

The Blackwell Oil & Gas Company has 2,000,000 feet of gas in No. 1 Magette, section 13-26-1w, from the shallow sand at 697-710 feet.

The Alcorn Oil Company has 12,000,000 feet of gas from the shallow sand at 790-95 feet in No. 1-A Endicott, section 35-25-1w.

The Comar Oil Company has 1,500,000 feet of gas from 825-30 feet in No. 3 Blubaugh, section 2-24-1w.

Okfuskee County—In the Lyons Pool, the Turman Oil Company has a gasser in No. 10 Barnett, section 24-11-11, sand at 2,800-2,810 feet.

North of oil production in the Midwest Pool, W. R. Page has been unsuccessful up to the present in mudding off the big gas in No. 1 Wind, section 36-11-9. This well was credited with 50,000,000 feet of gas from sand at 2,904-2-970 feet, which was mudded off but the mud blew out. It will be mudded again.

The Texolean Oil Company in No. 1 on the Wind tract is reported good for 10,000,000 cubic feet at 2,156-75 feet. This location is in section 36-11-9.

The Atlantic Oil Producing Company has completed a 4,000,000-cubic foot gasser in No. 1 on the Barnett tract, section 34-11-11, reaching the sand at 3,042-47 feet.

Oklahoma City—The Oklahoma Gas & Electric Company reports gross earnings of $5,587,488 for twelve months ended July 31st, 1922. Net after taxes was $1,405,470, and balance after charges $568,027.

Okmulgee County—The Leonard Petroleum Company in No. 1 on the Grant lease, section 19-16-13, is reported good for 60,000,000 cubic feet at a depth of 1,460-75 feet.

Osage County—The Oklahoma Natural Gas Company found 13,000,000 feet of gas in the Burgess sand at 1,613-23 feet in No. 611, section 28-20-12.

J. E. McKinney reports 9,000,000 cubic feet of gas at a depth of 1,743 feet in the Bartlesville sand. The production has been taken over by the Oklahoma Natural Gas Company.

Tulsa County—The Western National Gas Company has completed a well having a production of 12,000,000 cubic feet at 2,135-80 feet.

An 8,000,000-foot gasser has been completed by West and associates in No. 2 on the Tiger lease, section 12-18-12.

Wann—The plant of the Georgia Oil & Gas Company has been taken over by the city and will in future be operated on municipal account.

PENNSYLVANIA—*Allegheny County*—Charles F. Wachter's test on the Robert Greese farm is a light gasser in the fourth sand.

Greene County—Two miles west of Ninevah, Morris township, the West Virginia Natural Gas Company has drilled a test on the Lewis Power into the Ninevah 30-foot sand. A gas pressure estimated at 2,000,000 cubic feet was developed in this formation.

In Morris township, the Carnegie Natural Gas Company's test on the Enoch French farm is a gasser in the Gordon sand.

In Springhill township, the Marshall Oil & Gas Company's test on the Thomas Clark farm is a gasser in the Big Injun sand.

In Richill township, the Fort Ryerson Oil & Gas Company has completed a test on the Norman Lyons farm. It is a gasser in the Pittsburgh coal at 357 feet.

In Morris township, the Natural Gas Company of West Virginia has a gasser in the Gordon sand at a test on the Lewis Powers lease.

In the same township, the Carnegie Natural Gas Company's test on the J. E. Lough lease is a gasser in the Big Injun sand.

In Washington township, Myers, Long & Company's test on the Lee R. Shoup lease is dry in all sands.

Harlansburg—The S. E. Turner Oil & Gas Company has completed a 1,000,000-cubic foot gasser on the C. H. Turner farm near this place. The well is located in the extension of the North Liberty field, which takes in parts of Lawrence, Butler and Mercer counties.

Tidioute—The Clinger Oil & Gas Company has completed a gasser said to be good for 2,500,000 cubic feet

The winding path may possesss more beauty, but the straight road speeds arrival.—Vision.

gas per day in the Queen sand pool. This well is [illegible] feet from the first well drilled in by these same [illegible] on the Wheelock farm.

Washington County. In Canton township, Hughes & [illegible] have completed a light gasser in the fourth sand at [illegible] on the Edward Malone farm.

The Manufacturers Light & Heat Company has a gasser in the Pleasant Grove District, on the A. & D. J. [illegible] farm.

In the Imperial District, the Valley Oil & Gas Com[illegible] test on the Rosetta Kelly farm is reported a [illegible] in the fourth sand.

Gallatin County. The Caseman Oil & Gas Company in its [illegible] the Caseman farm, Springhill township, reports [illegible] having a yield of around [illegible] cubic feet.

Carter County. The People's Natural Gas Company, which two years and a half ago drilled in the [illegible] producing well in the world near Ligonier, being [illegible] the Booth & Elum lease, have been drilling [illegible] years developing a second deep test in the same [illegible] on the Seger Brothers lease. This well is now [illegible] feet. A third well is also in progress, being [illegible] feet at this time, and this is No. 1842 on the [illegible] & Elum tract.

WEST VIRGINIA. *Braxton County.* The West Vir[illegible] Central Gas Company reports a production of 570,[illegible] cubic feet of gas from well No. 3, on the Henry [illegible] farm, Otter district.

[illegible] reported that a well of 7,000,000 cubic feet ca[illegible] has been completed on the Gerwig farm on [illegible] Fork of Steer Creek, Otter district.

[illegible] on the D. S. and C. F. Engle farm in Otter [illegible] is reported as producing at the rate of 5,000,000 [illegible] feet of gas daily. This well was drilled by the [illegible] Virginia Central Gas Company.

[illegible] *County.* An estimated production of 300,000 [illegible] feet of gas is reported by G. L. Calse from the [illegible] Bell No. 2 well on Sheridan district, which was [illegible] 2145 feet deep.

[illegible] production of 540,000 cubic feet of gas daily is [illegible] from the newly completed well No. 1 of the [illegible] Creek Oil & Gas Company on the P. W. Col[illegible] farm in Sheridan district.

Lewis County. In McClelland district, Tramor & [illegible] have a Gordon gasser at a test on the Stewart heirs' [illegible]. Drilling has been suspended to move back the [illegible].

[illegible] *County.* A production of 2,100,000 cubic feet [illegible] gas is reported from well No. 6171 of the Hope Nat[illegible] Gas Company on the J. E. Reaser farm in DeKalb [illegible].

The Laurel Creek Oil Company's test on the F. W. [illegible] farm in DeKalb district has been completed to the [illegible] sand and is showing for a 750,000 foot gasser.

The Hope Natural Gas Company has completed the [illegible] Cooper well No. 208 in DeKalb district. The well is producing at a rate of 281,568 cubic feet of gas.

Harrisville. At [illegible] Mills [illegible] has completed a well which is said to be good for 11,000,000 cubic feet.

Kanawha County. J. B. Weir has completed a gasser in the Weir sand at the No. 93 well on the tract of the Falling Rock Cannel Coal Company in Big Sandy district.

The Kanawha City Oil & Gas Company completed the No. 1 well on the tract of the Campbell's Creek Coal Company at a depth of 1,800 feet. The daily production is estimated [illegible] at about [illegible] cubic feet of gas. The well is in London district.

The United Fuel Gas Company reports an average daily production [illegible] of about 1,700,000 cubic feet of gas from the H. C. Dickinson well No. 1214 in Cabin Creek district, which was drilled 2,027 feet.

In Big Sandy district, the Peerless Carbon Black Company's No. 8 on the Osborne Brothers farm is a light gasser in the Weir sand. It is also showing a little oil. In the same district the United Fuel Gas Company's test on the I. V. Koontz farm is good for 1,000,000 feet of gas in the same formation.

Lincoln County. L. S. Prolinore and others report a production of 700,000 [illegible] feet of gas from the Marshall Johnson No. 1 well in Carroll district, which was drilled 2,100 feet.

It is reported that No. [illegible] on the Caldwell lease, Laurel Hill district, drilled by the Huntington Development Gas Company has a production of [illegible] cubic feet.

Newton. The Elkins Oil & Gas Company has completed a good gasser on the D. L. Lawney farm, near this place.

Parkersburg. Officers and superintendents of the South Penn Oil Company met with the representatives of the employes on the occasion of the recent annual meeting of the Welfare Department of the company. Among those present were the following: President, L. W. Young; Vice President and General Manager, F. F. Crocker, Pittsburg; Treasurer, S. G. Hartman, Pittsburgh; Superintendent, [illegible] Curry; J. J. Huffman, head of the Welfare Department, of Pittsburgh; General Superintendent, F. H. Turner; Mannington Division Superintendent, [illegible] Ward; Charleston, Division Superintendent, [illegible]; Marietta Division Superintendent, [illegible]; Superintendent, Parkersburg; D. J. [illegible] Superintendent, Parkersburg; and [illegible] representatives [illegible].

Putnam County. [illegible] Mannon No. 4 well in [illegible] [illegible] cubic feet of gas [illegible] reported [illegible] Oil & Gas Company.

Kitchen County. [illegible] the Hope Natural Gas Company [illegible] Maxwell Bros. farm is a Max[illegible] gasser.

In [illegible] County, [illegible] Natural Gas Company have completed a test [illegible] Mace farm [illegible] a gasser with a capacity of [illegible] cubic feet.

The successful man lengthens his stride when he discovers that the signpost has deceived him.—The Lamp.

[illegible]

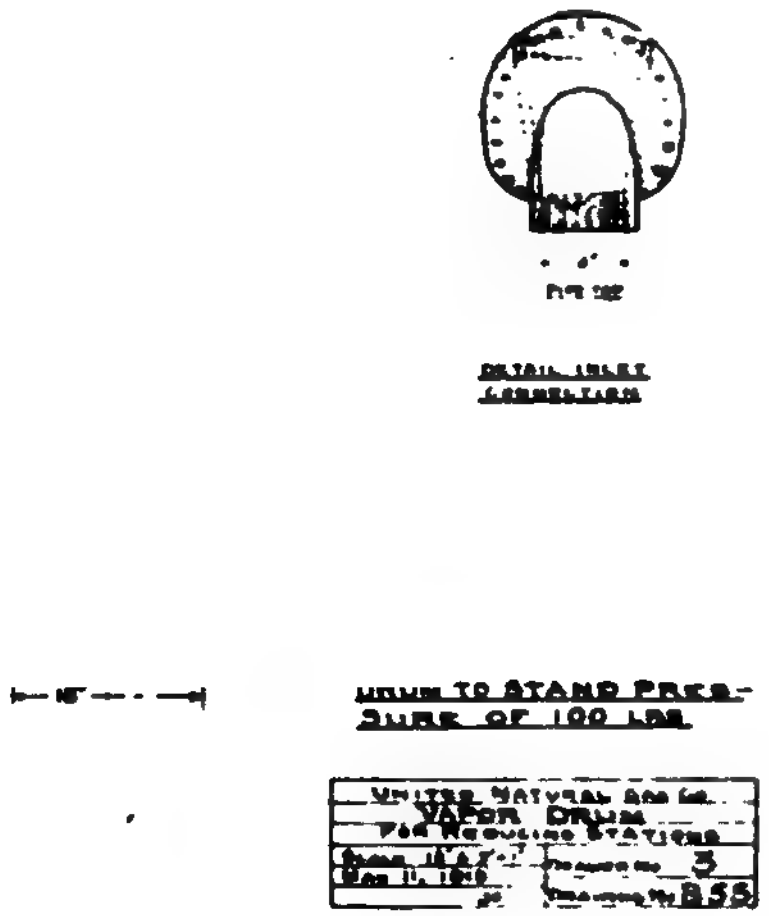

TANK FOR CATCHING FLUID OR VAPOR

[illegible], United Natural Gas Company [illegible], Pa.

Drawing No. B-55 shows a fluid or vapor catching tank, where gas is saturated with moisture of any kind.

BLOWING WATER FROM WELL

[illegible] of Natural Gas Company [illegible], Pa.

[illegible] good success as long as the rock pressure [illegible] pounds or over in running [illegible] or 1 [illegible] the well, perforating the bottom [illegible] hanging the pipe in a stuffing box on well [illegible] the [illegible] 1 inch pipe in ahead of the [illegible] at the well, and then blow the well into a [illegible] and no gas will be wasted.

[illegible] be done where the line pressure does not [illegible] pounds [illegible] higher the rock pressure, [illegible] the line pressure can be [illegible]

[illegible] the [illegible] stop and when the pressure is high enough [illegible] will blow out thru the [illegible] or 1 [illegible] and water can then be blown from the drip [illegible] waste of gas.

GAS MASKS FOR GASOLINE PLANTS

[illegible] Pa.

The type of gas mask [illegible] consists merely of a face piece and a breathing [illegible] long enough to reach from the wearer to a [illegible] place [illegible] valuable around natural gas gasoline plants, especially in examining the unloading valves of tank cars used for gasoline shipments.

Regulation army gas [illegible] can be adapted for this purpose at very small [illegible] merely necessary to disconnect the rubber [illegible] canister from the face piece and attach a piece [illegible] the desired length incorporating the valve at the bottom of the canister or a similar valve in the connection between the hose and the face piece to prevent breathing air through the hose.

Improvement is nature. Hunt.

TOBEY DIAPHRAGM TESTING TOOL

[illegible] United Natural Gas Co. Titusville, Pa. and
McDonald Central Natural Gas Co. Bradford, Pa.

[illegible] efficient tool for rapid and open examination [illegible] new or old No. 1 Tobey diaphragms is shown [illegible]

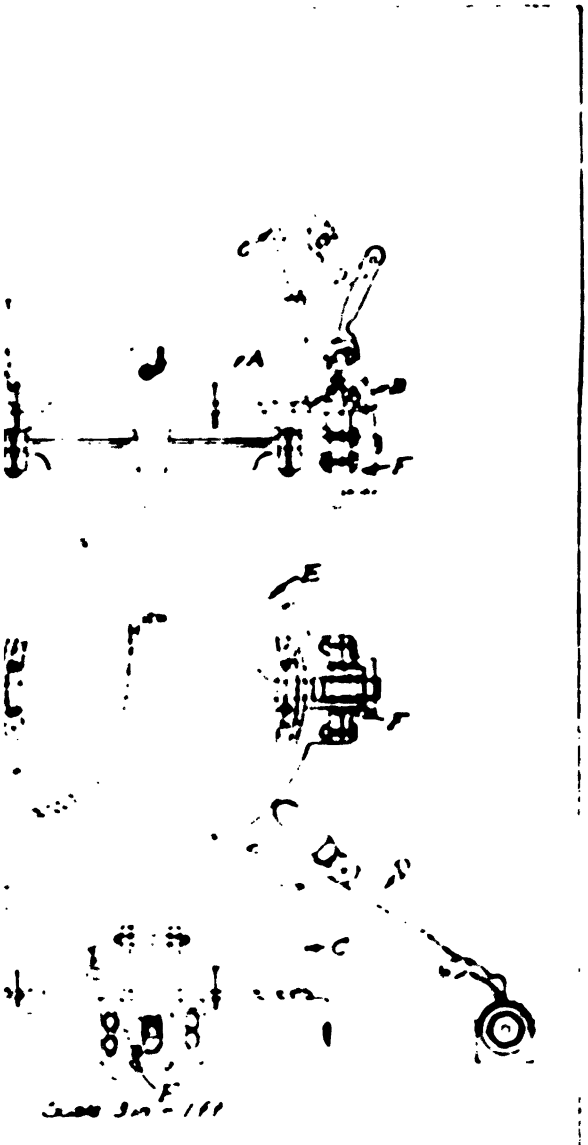

[illegible]

[illegible] at A which is made [illegible] diaphragm leather [illegible] is then [illegible] position [illegible] looked at disc B. Pull [illegible] and collar [illegible] pressed down on diaphragm [illegible] by eccentrics on shaft [illegible] through hose connection [illegible] diaphragm [illegible] pressed [illegible] of diaphragms have been recovered and put through this tool. It is becoming difficult to secure diaphragm leather and this plan [illegible] maintain our present supply.

ATTACHMENT FOR REELING WIRE PUMPING LINES

M. A. Bennington, United Natural Gas Co., Charleroi, Pa.

To make attachment for reeling wire pumping lines from pulling and bailing machines, an extension frame is made from 3" x 6" hemlock plank with legs to support the outer ends. The other ends are attached with a hinged joint to the frame of the bailing machine.

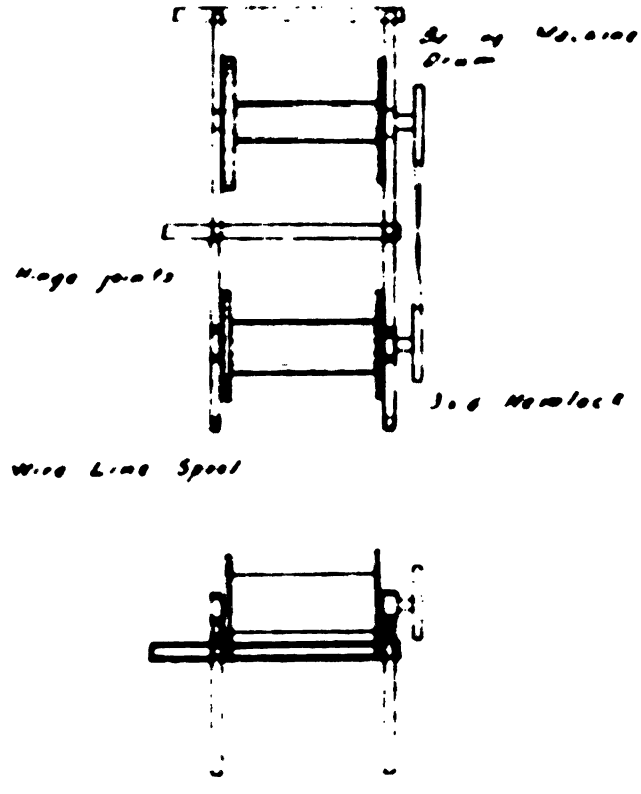

ATTACHMENT FOR REELING WIRE PUMPING LINES

The spool is provided with a belt from the drum shaft and it is possible to quickly remove a wire line from the machine after pulling same from the well to allow the use of the tubing line on the drum. The pumping line is later responded on the drum for returning to the well.

CARE OF WATER COOLED ENGINES

[illegible]

At many of our wells where water cooled engines are used we often find [illegible] water. In many instances it is either alkali or salt water that is available for cooling the engine.

This water has a bad effect on the engine, causing it to corrode and clog up. We have found by experimenting that the best way [illegible] is to run two or three gallons [illegible] through the jacket a couple of times each year.

A water cooled engine [illegible] water [illegible] long enough to cause it [illegible] heated before water is turned into it.

By observing the above I feel that the water cooled engine will last longer and will render much better service.

PLATFORM TRUCK, HEAVY SERVICE

[illegible]

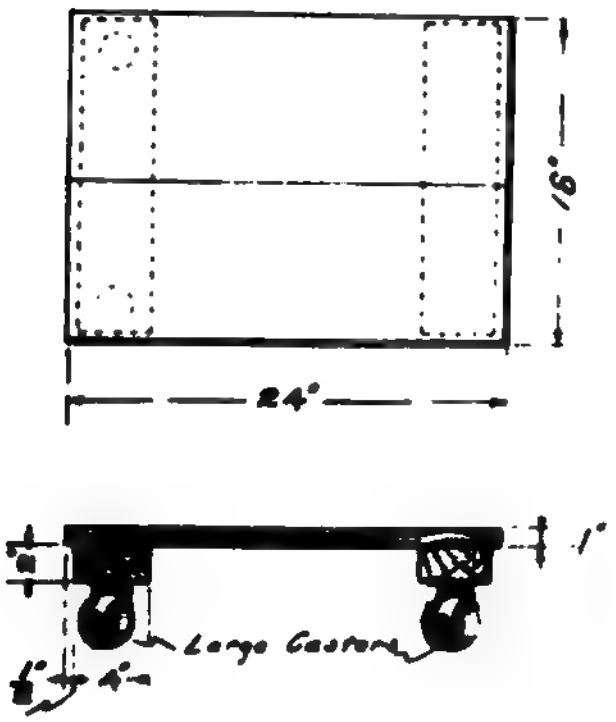

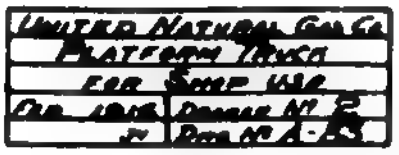

Drawing A-83 is a little platform truck used in the pump and meter room for the purpose of easily handling the regulators and meters.

WAREHOUSE AND PIPE YARD

[illegible]

The subject of arranging and maintaining a warehouse stock in the best and most efficient way is a very broad one, but I would offer the following suggestions as a preventative of lost time and worry in the handling of warehouse stock efficiently.

When pipe is taken from the field to the warehouse it should be assorted and piled and the threads cleaned. If it is found that any of the joints are unfit for further use, these defective joints should be piled separately or on what I term a "Rainy day pile." In inclement weather this pipe can be inspected and will perhaps require rethreading, new collars or a split sleeve removed from it. When the joint is properly repaired, it can then be transferred to the pile containing good pipe.

The same care should be exercised in the handling of all fittings. When fittings are received at the warehouse they should be examined and well oiled and any that require repair should be placed in a section by themselves and later repaired. I would mention gates in particular. When removed from a line, a gate should never be used again, without first taking it apart and thoroughly cleaning and oiling it. The same should apply to stop cocks. The warehouse should be equipped with shelves and bins properly labeled. This will prevent lost time when fittings or other material are required.

When a working barrel is removed from a well, it should never be placed in the warehouse stock until after it has been cleaned and well oiled, especially steel barrels as they will rust very quickly. Many men have the idea that by filling a working barrel with oil and plugging each end, that the barrel will be kept in good condition. In my opinion this is a mistake. I believe the best way to care for a working barrel properly, is to thoroughly clean it and then draw a quantity of oily waste thru the barrel. This will leave a thin coat of oil adhering to the inside of the barrel. The barrel should then be placed on a bracket in the warehouse, so that it will be off the floor and air will pass thru it. We also have found that by packing a blem or an O'Bell working barrel that is used for pumping thru ¾ inch pipe with common cotton candle wicking soaked in tallow, that the life of the barrel is prolonged.

In cleaning steel barrels those that have become worn can be placed in good condition by changing the collars, end for end.

BUCKET FOR FILLING AUTOMOBILE RADIATOR

[illegible]

This bucket will eliminate the spilling of water when filling a radiator and by its use an automobile can be filled much easier.

[illegible]

A bucket [illegible] as in the attached picture could be manufactured at a small cost over the price of an ordinary bucket.

[illegible] this world it is not what we take up, but what we give up, that makes us rich.—Beecher

A LINEAR CHART FOR CALCULATING PIPE LINE CAPACITIES

[illegible]

A very convenient means for calculating the capacity of gas pipe lines for transporting gas is submitted herewith in the form of a linear or nomographic chart.

The chart is to be used in solving graphically the Weymouth pipe line equation

$Q = C \sqrt{P_1^2 - P_2^2}$, in which

Q = Quantity of 4 oz. (Gravity gas passed per unit time

C = Coefficient depending on the pipe size, etc.

P_1 = Absolute Pressure at the High Pressure end of the line hereafter referred to as the Initial Pressure, and is Gage Pressure plus 14.4 lbs.

P_2 = Absolute Pressure at the Low Pressure end of the line hereafter referred to as the Final Pressure, and is Gage Pressure plus 14.4 lbs.

In case the gravity of the gas to be transported should vary considerably from .64, a correction may be applied by noting the distance between the observed result (.64 gravity) for any specific case and the true result (calculated) and applying this correction either by reading at this determined distance from the point indicated by the straightedge or by displacing the quantity scale vertically through a distance equivalent to this correction.

With this chart, not only can one solve for quantity but, with this figure known, the other factors, such as pipe sizes and pressures, may be determined.

Suppose, for instance, that the quantity desired to transform through a line of given length is known as well as the Initial and Final Pressures. To estimate the size proceed as follows:

Connect 2 and 5, get 3.

Connect 3 and 6, get 1.

Connect 1 and 4, and read above the point of intersection on scale Number 7 the nearest pipe size.

In estimating the pressures, either Initial or Final, the quantity, the length, and the size of the line are known and it is desired to determine the other pressure, the following method is recommended:

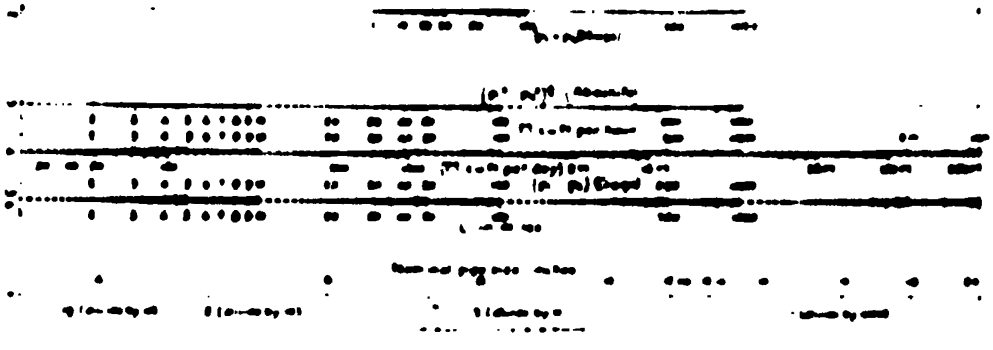

LINEAR CHART FOR CALCULATING PIPE LINE CAPACITIES

L = Length of the line in Miles.

C = Weymouth's coefficients as published in the Bessemer Manual, corrected to .64 Specific Gravity as used in the construction of this chart.

Assume that the Gage Pressure on both ends of a line of given length and size are known. To calculate the quantity of gas that this line will carry, first find the point on the Number 2 scale that corresponds to the sum of these Gage Pressures. With a straightedge connect this point to the position on the Number 5 scale corresponding to the difference of these Gage Pressures. Note the point where the straightedge crosses the Number 3 scale. Connect this latter point with the position on the Number 6 scale corresponding to the length of the line in miles, noting the intersection with the Number 1 scale. Connect this intersection point to the position marked with the pipe size on the Number 7 scale and then read from the Number 4 scale the answer either in cubic feet per hour or cubic feet per day.

Connect 7 and 4, get 1.

Connect 1 and 6, and read from scale Number 4 the numerical value of the quantity.

$$Q = \sqrt{P_1^2 - P_2^2}$$

Knowing either P_1 or P_2 the other is easily calculated.

TO PROPERLY DRILL STEEL

[illegible]

In drilling steel use the very best grade of steel as the drill's number being the proper grade.

The drill should be ground very thin in order that a heavy pressure may be applied to it. The drill should be turned slowly and kept wet with turpentine.

SUPPORT FOR RAILROAD TRACKS

Engineering Department, The East Ohio Gas Company, Cleveland, O.

Hangers which eliminate timbering while installing gas mains or other underground construction.

For gas work, they consist of four hangers to a set for each track and are used two to each rail above the trench.

The hangers are supported by two pieces of rail resting upon the ties on both sides of trench and lying close to and parallel to the rail being supported, which rests within the hangers.

They may be left in position until the roadbed has been restored and settlement taken place, they may be removed without damage to track ballast. "Safety First" demands, on the part of railroad companies, require that nothing be neglected in track maintenance.

This method is effective and inexpensive, eliminating delay in installation and removal, which is found in present method of timbering.

HELPS MAKE A LEAK CLAMP RUBBER HOLD

G. W. Pemberton, Gainsville, Texas

I have found that by putting two coils of asbestos wickpacking, saturated in white lead ahead of the collar leak clamp rubber has made a good job.

PRACTICAL BLUE-PRINT PROTECTOR

J. H. Schalek, Pittsburgh, Pa.

Heretofore blue prints for field use had to be carried in special metal tubes to preserve their legibility. Some blue prints are very costly and during the rush seasons are difficult to obtain. Pipe joint grease, ditch clay, and wet water soon makes a blue print useless. If the blue print—as it comes from the printer—is treated as follows, it is possible to lengthen its period of usefulness to an unbelievable extent:

Lay the print, face up, on a flat s
of hard paraffin wax into fine shavir
print liberally. Then, with a gas ir
perature normally used in ironing
whole surface of the print. The me
saturates the paper making it water
to wash off any colored dirt encoun
gas fields, and even grease can easily be removed by an
oil moistened rag. The blue print prepared according
to the foregoing may be folded or rolled with as much
ease as the unprepared print. Also, tests have shown
that it is much more difficult to tear the print after it is
waxed. It does not have the sickening yellow color of
shellacked prints and is much more flexible.

HANGER

BAR FOR BORING AND RETHREADING COMPRESSOR HEADS FOR FALSE VALVE SEATS

J. T. Leight, Sigel, Pa.

Boring bar and rethreading tool such as we use for boring Laidlaw-Dunn Gordon Compressor heads for false valve seats. This requires two bars of 2¼" machinery steel, one threaded with 16 threads per inch as illustrated and another with 8 threads per inch.

Part 1—The boring bar is threaded with 16 threads per inch. Squared at top to fit a Dresser Coupling Ratchet Wrench. The other end is fitted with a ⅜" sq. high speed steel cutting tool with a ⅜" hollow set screw to clamp cutter in position with another to feed same. Rethreading bar is fitted the same except threads are 8 per inch and cutting tool is ground as for threading in a lathe.

Part 2—Is a stop collar fitted on thread of boring bar only fitted with a set screw in order to set at any distance, in order to cut seat for valve shoulder.

Part 3—Is a threaded collar with a shoulder at bottom end which is turned to a working fit in Part 5 and counter bored in Part 6.

Part 4—Is 4½" cap screws which hold bar and Part 5 in position.

Part 5—Is plate which clamps Part 3 tight when not cutting a shoulder for valve.

Part 6—Guide for bar, same screws into head where valve plug cap is removed drilled for a pin spanner wrench for setting up.

Part 7—High speed steel cutter.

Part 8—Hollow set screw for clamping cutter in position.

Part 9—Hollow set screw for feeding cutter.

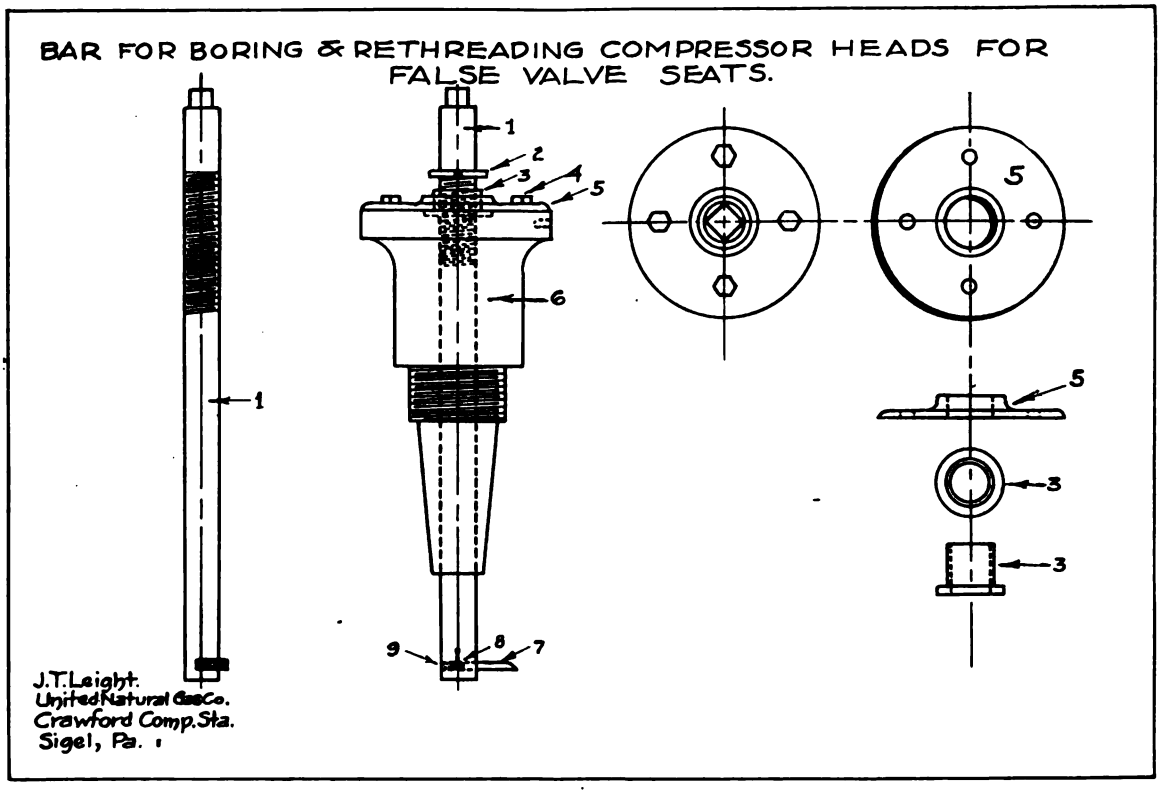

TO REMOVE PAINT FROM PIPE OR OTHER SURFACE

S. A. Schwab, Shippensville, Pa.

Wash the painted surface with potash dissolved in water. Use a swab, thereby preventing the liquid from touching the hands.

TELL FOLKS WHAT TO DO WITH DIAL METER CARDS

R. S. Cheatham, Fort Worth, Texas

Many companies have a set of dials printed on their gas cards for the convenience of their customers in reading their own meters, but much of the benefits are lost through failure to inform the customers what these dials are for. A short explanation will get better results. We suggest the following:

"If you question the meter reading, READ YOUR OWN METER. Read meter and punch with pin exact position of hands on this diagram and bring to our office."

The dials are printed right below this and usually get good results.

TRANSMISSION PIPE LIFTING DEVICE

T. P. McClintock, Youngstown, Ohio

solidly built and braced ditch-horse except that the top brace does not cross the trench, can account raising the pipe; but is securely braced, it has long

PIPE LIFTING DEVICE

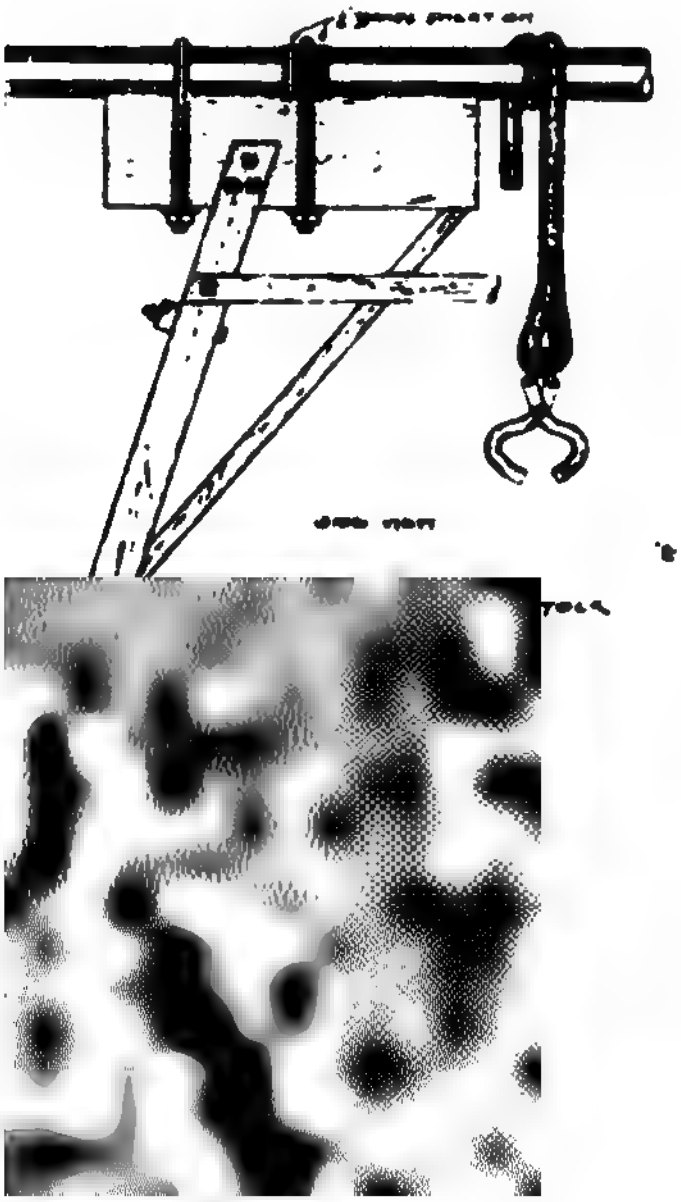

ing arms. A piece of 4 inch pipe is strapped to top brace with "U" bolts running on ½ inch hands ted to pipe

ort handled calipers grip the pipe in trench, they attached to a stout rope which has two turns around pipe on the horse. Tongs are applied to the 4-inch which acts as a winch and has great lifting power.

The East Ohio Gas Company has used this device in lifting 11 miles of 10 inch pipe and found it very satisfactory

TO PREVENT SPARK PLUGS FROM FOULING WITH OIL ON FORD ENGINE

M. S. Birmingham, Clairton, Pa.

To prevent spark plugs from fouling with oil on a Ford engine, I would suggest the use of two ½ inch nipples, one ½ inch tee and one ½ inch cap, with the

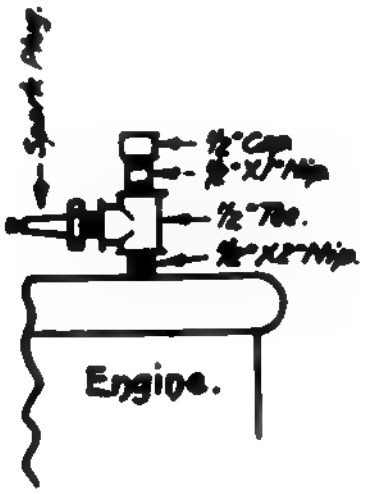

TO PREVENT SPARK PLUGS FROM FOULING WITH OIL ON FORD ENGINE

spark plug screwed in the side of the tee. This will prevent any plug from fouling with oil when the piston is leaking oil by the rings

TO KEEP THE FRONT WHEELS OF THE OLD "FLIVVER" GREASED

[illegible]

Solder an Alemite connection on the end of an extra hub cap and when you want to grease the front wheels, take the cap off and install the special cap with the Alemite connection and attach the Alemite gun and give it a shot

USE OVERSIZE RUBBERS ON COLLAR CLAMPS

[illegible]

I have found that by using oversize rubbers on a flat brake clamp they can be used very successfully. Use such rubbers as 10 inch or 12 inch Dresser rubbers on 6 inch or 8 inch clamps cut down to fit the clamp and by putting the rubbers on backward

PITOT TUBE CHART

[illegible] Pittsburgh, Pa.

ng the flow of gas in a pipe or the capacity of
em a pitot tube reading, a lengthy calculation
ts. In tables giving the flow only a few sizes
are [illegible] given, and interpolation is neces-
ead [illegible] which are not given in the table. In
[illegible] when the specific gravity of the
liquid in the tube is other than [illegible] the specific
gravity of the gas is other than [illegible] a calcu-
lation is invariably necessary.

By the use of the accompanying chart the calculation
of the [illegible] can be read. While not all sizes of pipe
are given, the position of any other size can be estimated
with a fair degree of accuracy.

Correction for temperature can be made by adding or
deducting [illegible] each 10° F. above or below
60° F. [illegible] chart.

PITOT TUBE CHART

[illegible]

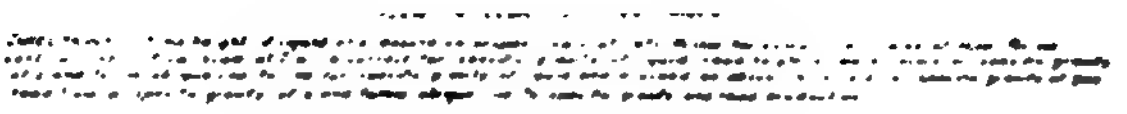

IMPROVED DOUBLE BALL AND SEAT FOR THOMPSON OIL PUMP TO KEEP GAS FROM WORKING ON VALVES

S. H. Phillips, Hundred, W. Va.

The wrinkle here shown is a double ball and seat in top of Thompson Oil Pump. This can be made out of old lower valve bodies without much cost, as you can find those in your junk pile around your tool house.

Take the top part of the lower valve of Thompson pump, bore out in lathe and fit in seat, the end tapered to receive a ¼ inch pipe. Then thread and fit cage of pump, and the other end will screw on sub in pump.

This gives you two valves on the top of the pump. This will pump any well where gas bothers the valves. The top valve on the Thompson pump is a suction valve, and on any gassy well the gas taken in with the oil holds the ball off the seat and therefore the pump loses suction or lift.

I have tried with all makes of improved pumps to get rid of gas working on valves in a well, and this is the best method.

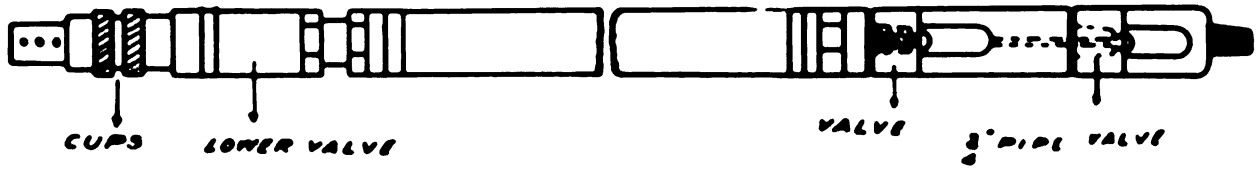

BENCH PRESS FOR REMOVING BUSHINGS AND SLEEVES

L. A. Wood, Warren, Pa.

This vise can be used for removing gears from shaft also bushings and sleeves. It can be taken apart and placed under a bench or the railroad iron can be left on the bench to be used for anvil in place of vise which is too commonly used for an anvil.

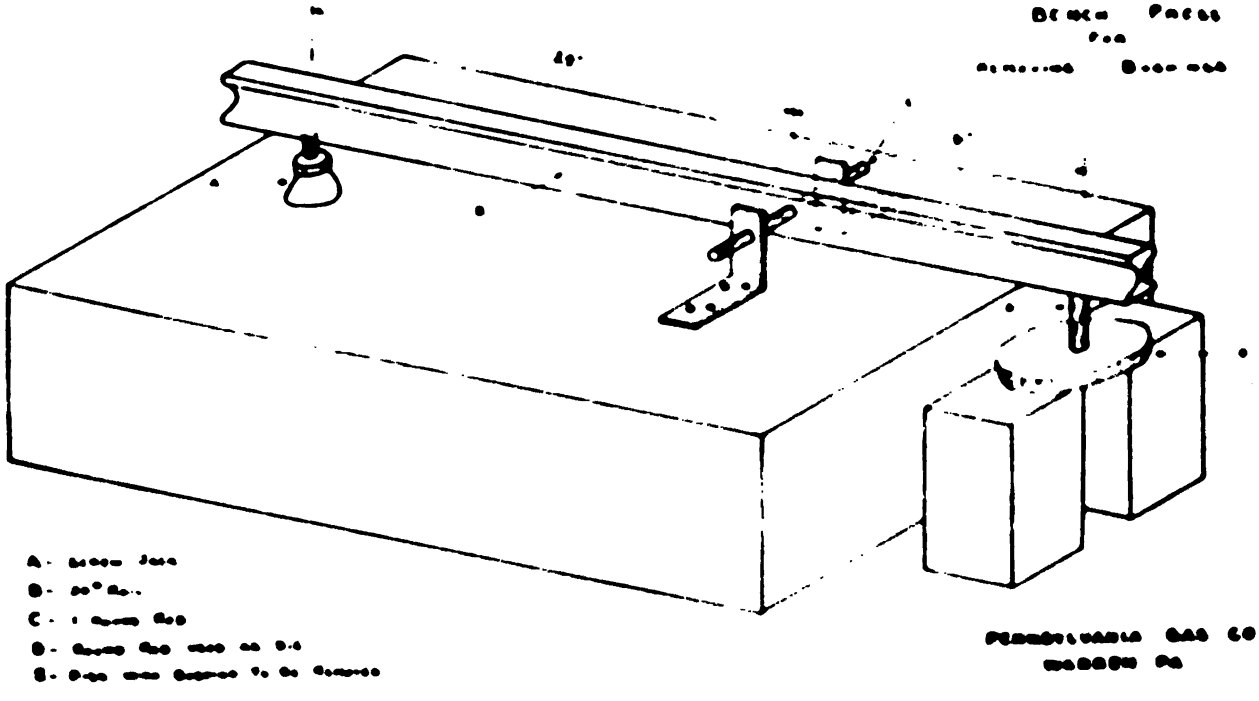

SPECIAL FOUR PIECE CLAMP FOR STOPPING A LEAK IN A BROKEN 6x2 CAP

M. A. Birmingham, Clermont, Pa.

The sketch shows a four-piece special clamp for stopping a leak in a broken 6x2-inch cap. The break was caused by a crescent shaped piece breaking out of cap where it was tapped for the 2-inch center opening. This allowed the gas to escape around the threads of the 2-inch nipple.

The special clamp is made in four pieces, as shown on this sketch. The four pieces are bolted together in the corners and a recess is turned in the center around the 2-inch opening to permit the rubber to seat in same. The clamp can be taken to the leak and put around the 2-inch pipe in sections, then bolted together. In addition to the special pieces, it requires a 2-inch hold-down clamp and a 6-inch hold-down clamp. The 6-inch hold-down clamp is placed back of the 6x2-inch cap on the 6-inch pipe and the 2-inch hold-down clamp is placed back of the special clamp around the 2-inch pipe. The two collar leak clamps are then drawn together with two double end bolts, which tighten the special clamp against the face of the cap and completely stops the leak.

The use of this clamp eliminated the draining of several miles of 8-inch line to repair same.

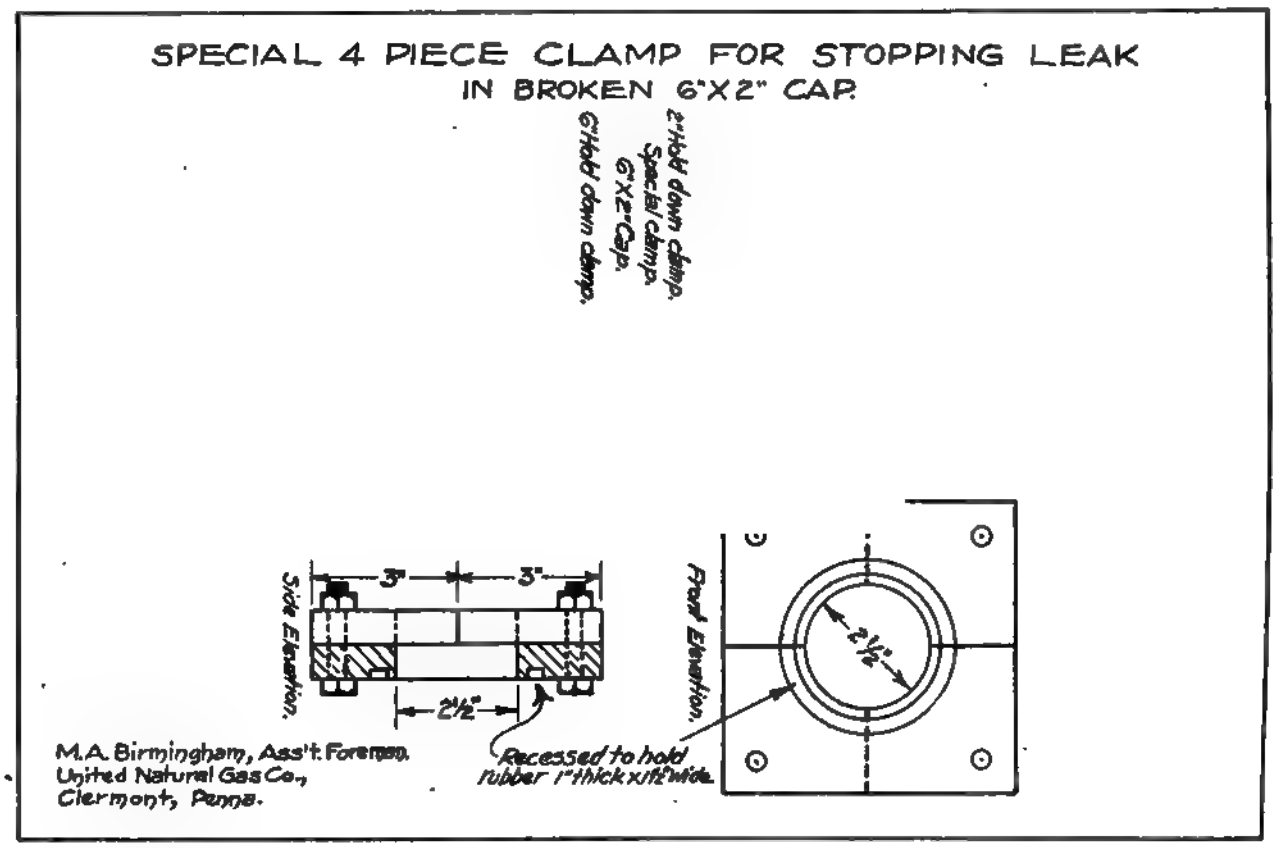

USE TWO REGULATORS ON ENGINE LINES

R. E. Benninger, United Natural Gas Company

I have found by experience when we have more than two engines to get good results from them we have two regulators on our fuel line that gives our pressure a very steady flow. For example, if our pressure is fifty pounds and we want it at one pound we use a regulator from fifty to ten pounds, and one from ten to 0. We are getting better results than when we only used one regulator and have stopped considerable back firing.

GAUGING GAS WELLS

C. C. Lynn, Shippensville, Pa.

In order that a well tender may know the exact condition of his well, he should take a 5-minute gauge of the well at least once a week. That is, when he visits the well, he should take the line pressure and then close the control stop and ascertain exactly what his well is doing, or if it compares favorably with the previous week's gauge.

If the well does not gauge up properly, it shows that something is wrong. Possibly water has broken in on it or fluid has raised over the sand sufficiently to hold back the gas and you will know by this method that the well requires attention.

METER ROOM CARD INDEX RECORD

C. C. Tucker, Youngstown, Ohio

Make up a pan eight and one-half inches wide, three inches deep, and a length sufficient to hold the cards, containing the records of each meter, for a month. Partition this pan lengthwise through the center and provide three movable stops or holders of the same gauge of galvanized iron as the pan, which will appear as follows.

There is sufficient spring to the bend of these holders to keep them in place, yet they can be slid either way along the edge of the pan over which they fit, to take care of the increasing or decreasing pile of cards.

Fill in the incoming record of each meter on a separate card and place these cards in the left hand compartment of the pan. These cards cover all meters in stock and are retained in place by one of the holders.

Use the other two holders to divide the right hand compartment into two parts, in one of which place the cards for meters sent out but not yet reported as set such as on trucks, etc.

In the other part place the cards of meters set, of which the record is complete.

The complete record will be as follows:

No.	702278
State	365 800
From	1711 Glenwood
Date	3-11-21
In Test	1 F
Remarks	Rusty glass broken
Size	5 Lt
Make	Cleveland
Set at	2719 Mahoning
Date	3-18-21
Out Test	½ S

When meter has been repaired, have each repair man mark on the back of meter tag what repairs were made and sign his initials, then at the time meter is given the prover out test, stamp on the back of index card with hand stamp and check off what repairs were made, write in the name of the man making the repairs, as follows:

Low Fire Test	X
Water Test	X
Ground Valves	X
Repacked Boxes	X
Adjusted Tangent	
Painted	X
Replaced Index Glass	

John Doe, 3-15-21

At the end of the month when ready to make up the monthly inventory it is a short job to count the meters in stock.

If count and cards do not tally some one has been "asleep at the switch" and discrepancies must be corrected at once.

At the time of making monthly inventory cards for all meters set during the month are removed and placed in another pan sufficiently large to hold a year's supply in *numerical order regardless of size or make of meter*.

In this way the only information required to look up the record of any meter is the number.

From the above description this system may seem complicated, but when put into actual use is very simple and forms a record that will enable the man in charge of meter room to supply any information desired in the office, also to keep a check on the work done by each man making the repairs.

This system in actual test has cut the time of making up the monthly inventory 60 per cent and gives an absolute record limited only in the number of years it has been in use.

ADJUSTABLE RAISED SKELETON LID

Charles F. Hossmann, Columbus, Ohio

This lid is made in two sizes, 7-inch diameter and 8-inch diameter. By sawing off the lugs (L) the required amount the seven inch lid may quickly and easily

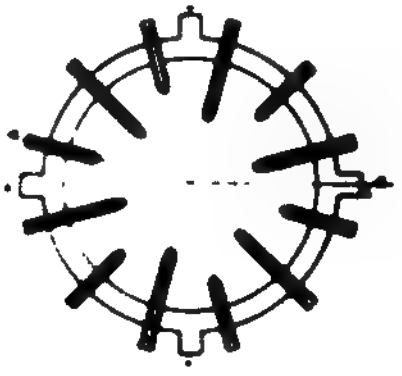

be made to fit any stove opening from 7 inches to 8 inches and in the same way the 8-inch lid may be made to fit any opening from 8 inches to 9 inches.

Competition is the balance wheel which keeps business healthy

EMERGENCY MEASURE TO STOP LEAKAGE ON PIPELINE EQUIPPED WITH COUPLERS DUE TO GASKET SHRINKING

[illegible]

We operate a twelve inch plain end Hammon Coupler pipeline between the Midway Field in Kern County to Los Angeles, Calif. When line was first installed the gas received was wet gas and the gaskets used in the couplers were manufactured to absorb the gasoline in the gas. Later dry gas was placed in the line and consequently the gaskets began to shrink and loosen the bolts causing considerable leakage. In order to stop the leakage until new holes could be dug over the joints and the bolts tightened, kerosene was put in the line.

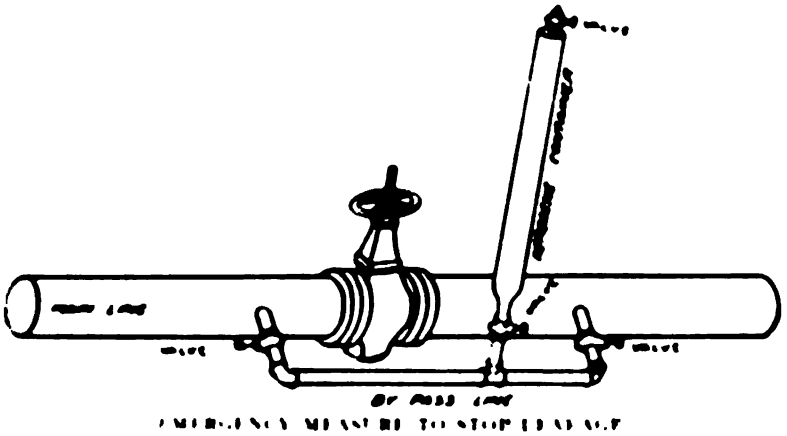

EMERGENCY MEASURE TO STOP LEAKAGE

This was accomplished by putting the kerosene into a cylinder that had a valve on each end. One of the valves on the cylinder was then connected to a blow off valve on a by pass of the main line, the valve on the cylinder that was connected to the blow off valve being opened the valve on the other end of the cylinder closed. The blow off valve opened and gas turned through the by pass. The kerosene would trickle down the blow off pipe and be absorbed by the dry gas, the kerosene in turn being then absorbed by the gaskets.

USE OF MACHINES IN OFFICE WORK

[illegible]

All our work is performed by machines. We use a typing and billing machines, addressing machine and cash register.

To use machines profitably, it is necessary to get full results, eliminate disadvantages and cash in on all advantages. Many companies would use machines if they could figure it out satisfactorily as we have. I know of several companies whose only reason for not having cash registers is the belief that it is necessary to make separate cards and ring up each payment separately. We educate our customers to pay by mail. To overcome the necessity of making up all these cards and registering each payment separately, we list all mail payments on an adding machine, then check them back and make one stub for the entire amount. The cashier checks the list and rings up the entire amount, then drops the stubs into the receptable. This is much quicker and just as satisfactory.

SONOSCOPE FOR LOCATING WATER OR OIL IN GAS MAINS

[illegible]

A sonoscope is attached to a piece of steel rod.

It is supposed to be used locating water or oil in gas lines or to detect a leaking gas gate. The sonoscope costs

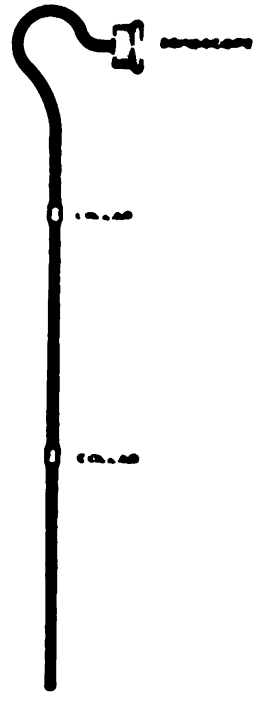

SONOSCOPE FOR LOCATING WATER OR OIL IN GAS MAINS

[illegible]

about $1[illegible] and [illegible] in the shaft [illegible]. The instrument is very delicate [illegible] gas or water being [illegible] a gas main is detected [illegible] water giving [illegible] and [illegible] gas.

With a [illegible] and [illegible] quite pleasant and [illegible] and money could be saved in heating [illegible] especially true when [illegible] make under the pavement [illegible] be inserted in small hole [illegible] located without disturbing [illegible] pavement.

METER HOUSE MADE OF WELDED PIPE

Paul R. Johnson, Independence, Kans.

The drawing shows a welded pipe frame meter house which we have been constructing during the past year. The drawing shows nothing but the layout of the frame to which the iron is attached by special wires which have a head on them similar to a nail and which go through the iron and twist around the pipe.

This makes an especially strong and heavy meter house and, of course, is built of junk pipe so that the cost is comparatively low.

You will note in the front elevation a piece seven inches long is cut out of the lower member of the frame and a piece of one and one-fourth inch pipe is made to fit in this place so that the meter house may be set down over an existing meter connection and the same cut-out should be in the rear elevation which, however, does not show in the illustration.

The houses have all been constructed at the warehouse and hauled to the field on a truck and this one sheet of tin both in front and back has been sent out loose so that it could be properly cut to fit closely and neatly around the meter connection.

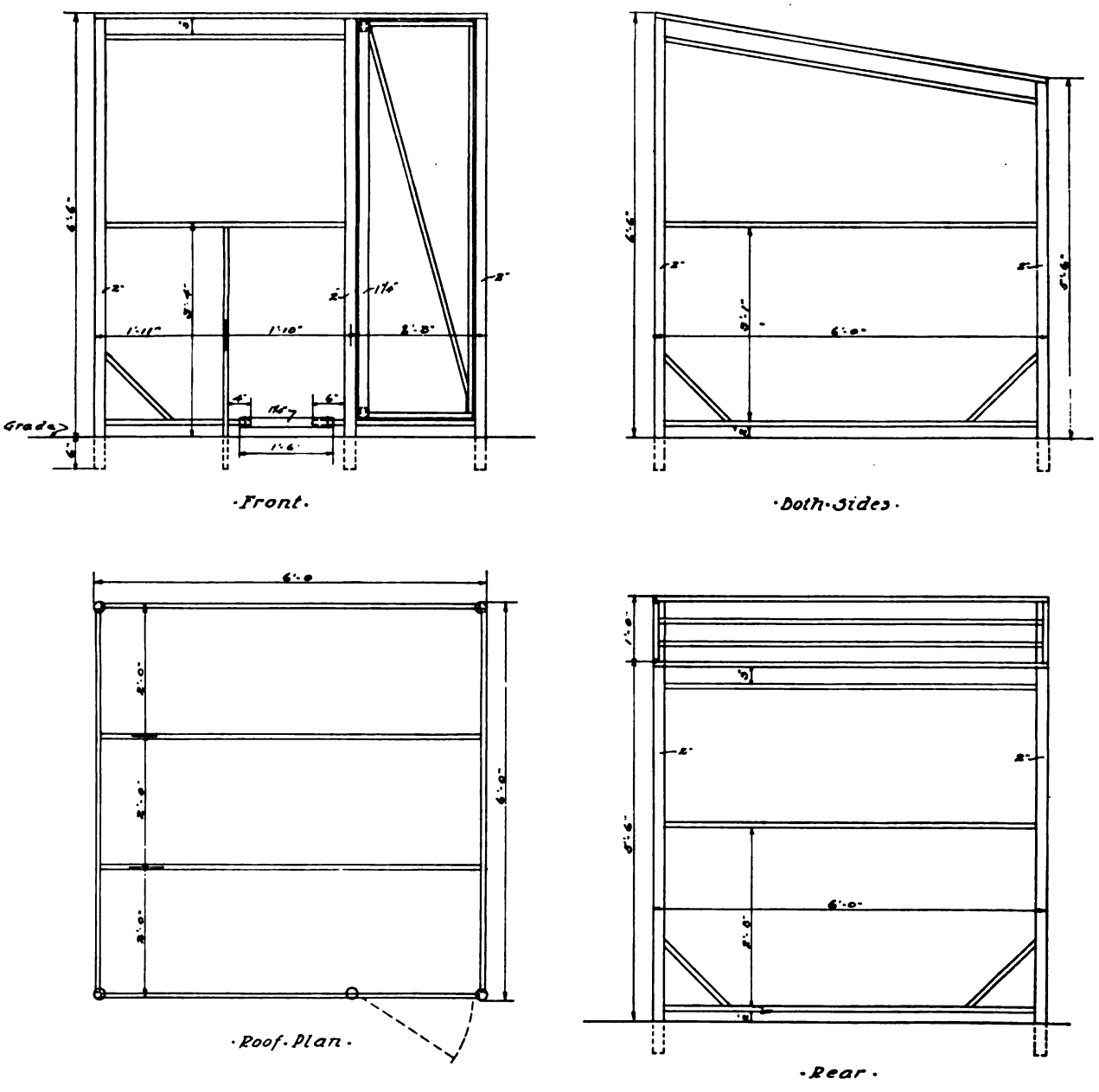

METER HOUSE MADE OF WELDED PIPE.

THE NEVER MISS IGNITER MADE FROM OLD SNOW IGNITER PARTS

M. J. Sowers, Sigel, Pa.

Part 1 Made of worn out Snow igniter crank lever
Part 2 Jam or clamp nut clamps movable electrode to crank

VIEW NO. 1.

Side Elevation

VIEW NO. 2.

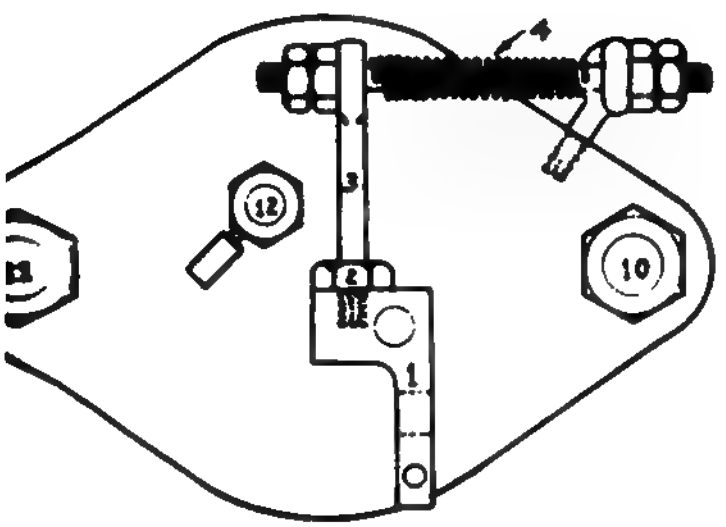

End Elevation.

NEVER MISS IGNITER MADE FROM OLD SNOW IGNITER PARTS

Part 3 Crank lever
Part 4 Break Spring
Part 5 Eye bolt.
Part 6 Adjusting nut.
Part 7 Eye bolt screwed in to rim of igniter casting
Part 8 Connecting nut connecting the two eyebolts together
Part 9 Movable electrode
Part 10 Connecting nut connecting break spring to eyebolt
The device is a great improvement on the 10x18½ Single Cylinder No. 1 Klose Engine Igniter
Parts 10 and 11 Bolt halves for connecting igniter to cylinder
Part 12 Stationary Electrode
All parts of the device made of old worn out Snow igniter parts except the break spring

BLENDING NAPTHA THROUGH A STILL HEAD ON KNOCK-OUT BOX

[illegible]

The accompanying illustration shows a still head connected to the "knock out" or "expansion" box. Still heads or fractionating towers are designed to secure a "maximum separation" of the fractions in the distillate and when used as indicated should afford the following advantages:

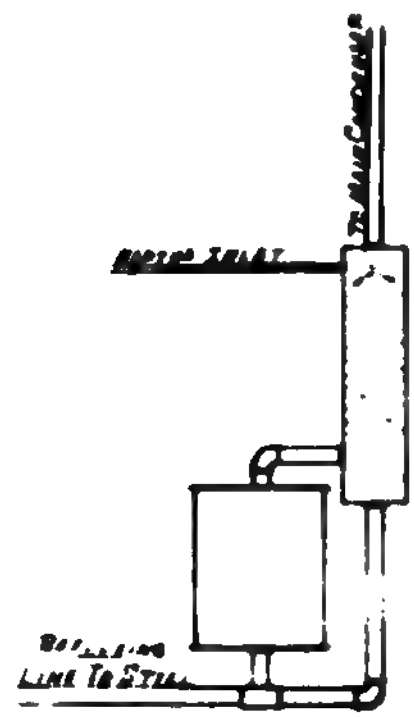

[illegible] STILL HEAD ON KNOCK OUT BOX

First [illegible] prevent heavy fractions [illegible] the still.

Second [illegible] uniformity of the naptha [illegible]

Third [illegible] but a blend of a complete chain of boiling points

AUTOMATIC REGULATOR FOR REDUCING FROM A LOW PRESSURE TO A STILL LOWER PRESSURE

L. S. Wood, Warren, Pa.

This regulator is made for the purpose as shown in cut for testing out diaphragms in meters.

The idea is to set this regulator to from 1½-inch to 2-inch water pressure. This does away with the repairman having to watch the pressure when testing out diaphragms and makes it impossible to put too great a pressure against one side of the diaphragm.

It is of great importance that the best of care be taken not to stretch a diaphragm when testing for leaks. We believe if greater precautions were taken along this line that meters would come back, running nearer 100 per cent.

The sketches show regulator construction and how it is to be connected up and used in conjunction with the Arch gauge.

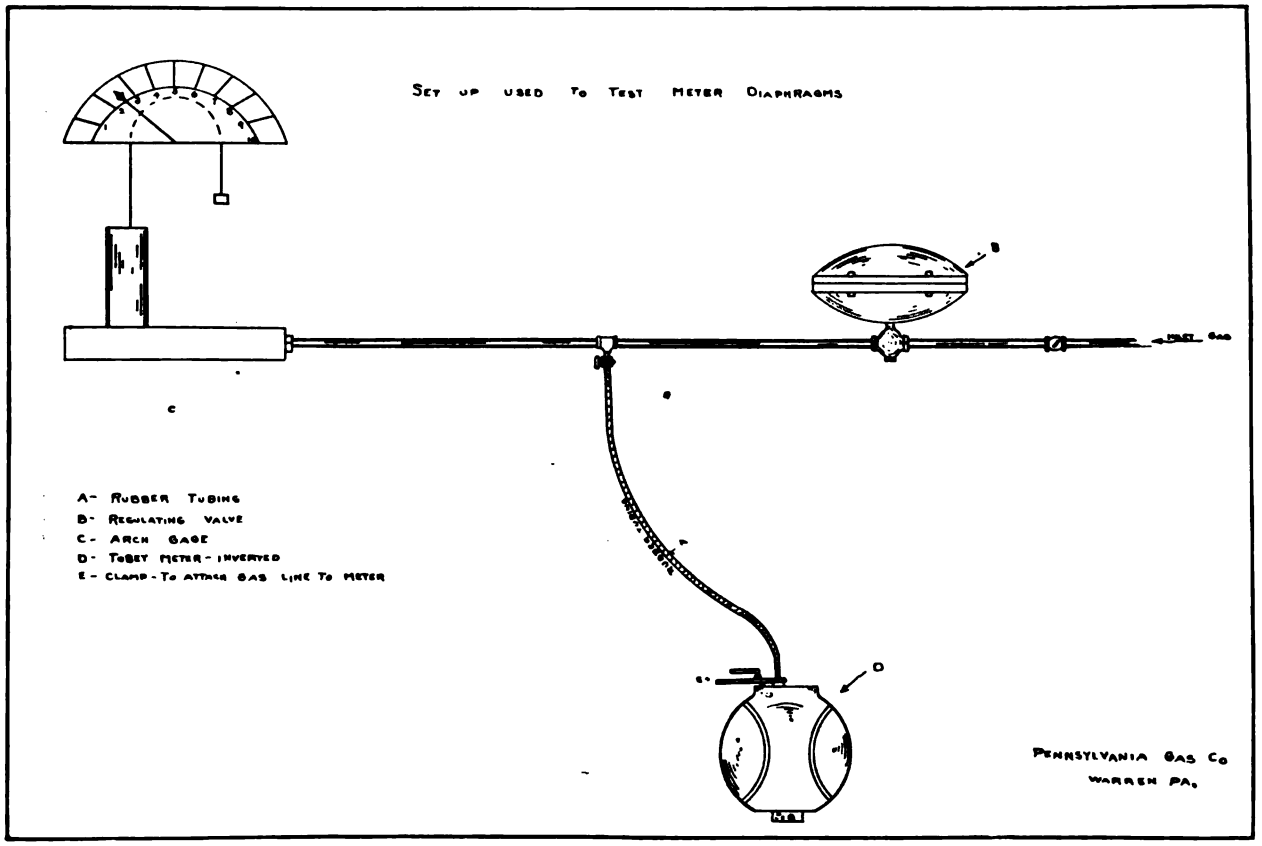

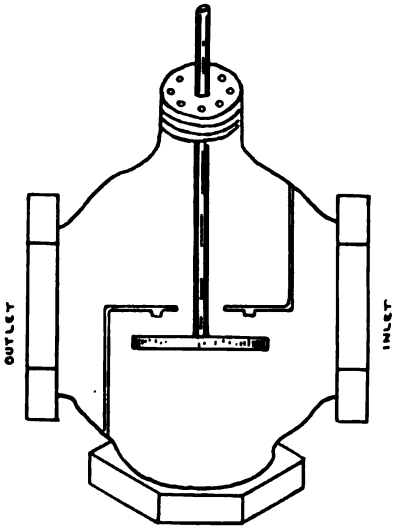

Special Valve

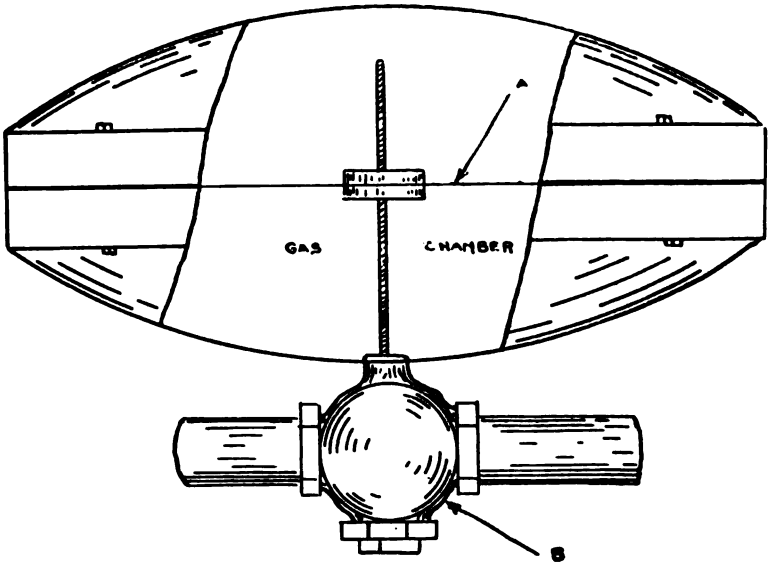

A - Rubber Diaphragm
B - Valve

AUTOMATIC REGULATOR FOR REDUCING FROM A LOW PESSURE TO A STILL LOWER PRESSURE.

METER BENCH USED FOR CLEANING AND PAINTING METERS

H. P. Shawkey, Warren, Pa.

You will find this a very handy and convenient paint bench, as the top where meter sets rotates, doing away with having to turn the meter by hand in order to paint

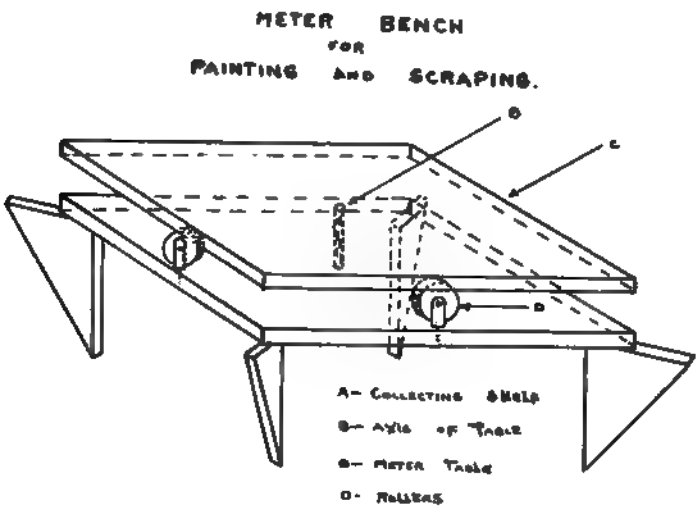

on all sides of the meter. In cleaning the meter it catches all the rust and dirt instead of having it all over the floor. The base can be used for keeping paint brushes, etc.

HANDY TOOL TO USE IN INSTALLING SADDLES

Jas. P. Strickler, Columbus, Ohio

This illustration features a simple and handy tool to use in installing saddles. We find it a great time saver, as a saddle can be tightened up with it in less than half

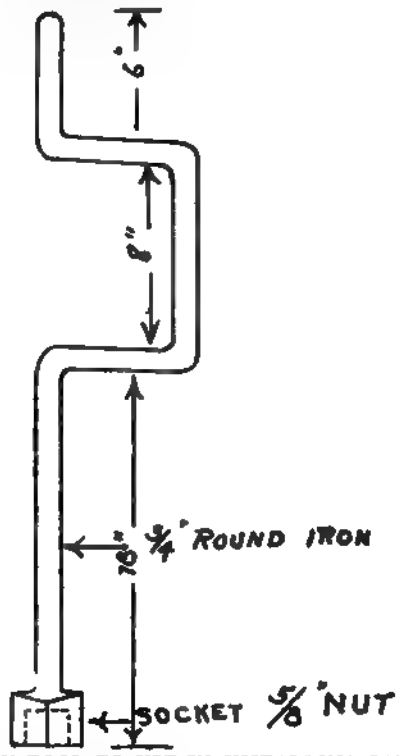

HANDY TOOL TO USE IN INSTALLING SADDLES.

the time with any other kind of wrench. It is also very convenient for putting saddles on in close places—something learned from the Automobile Mechanic.

MARK LOCATION OF STOP BOXES IN FIRE ALARM BOOK

Charles DeWeese, Louisville, Ky.

We are adopting a wrinkle here for the benefit of our complaint department by making a memorandum in our fire alarm book giving location of stop boxes; i. e., where box numbers are for some specified building, such as

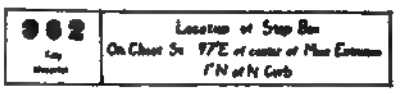

factories, theaters, hospitals, etc. For instance: Box 362, City Hospital Service Box on Chestnut Street 97 feet east of center of main entrance, one foot north of north curb.

Competition automatically weeds out the incompetents and rewards the hustlers

TO STOP LEAKS IN DRESSER COUPLING CONNECTION

J. I. Boswell, Dallas, Texas

I submit a method of stopping leaks in rubber joint couplings where pulling up on the coupling bolts will not do the work.

A piece of ordinary Dresser follower is cut to suitable length to cover the leaking portion of the coupling in use, which may be either two bolt holes, three bolt holes, or four bolt holes in length. About half of the lip on this piece of follower which holds the rubber in place is then ripped off so as to allow plenty of room to pull up on the rubber. A regular Dresser rubber is then cut to the same length as the piece of follower which is being used, and by using extra length bolts the leak may be repaired in the following manner.

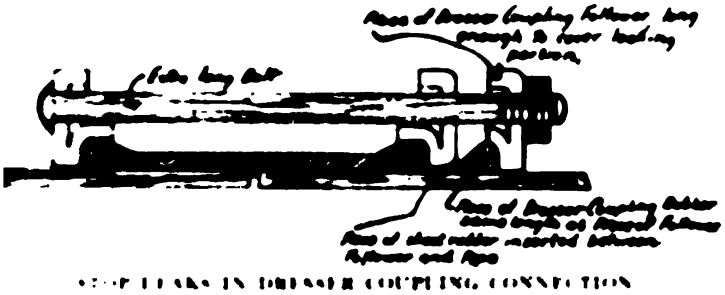

STOP LEAKS IN DRESSER COUPLING CONNECTION

The necessary bolts are removed from the leaking coupling and the piece of Dresser rubber to be used is inserted directly behind the follower and over that portion of the coupling in which the leak occurs. At each end of the length of this piece of Dresser rubber a small amount of thin sheet rubber is inserted, which will serve as a packing to calk the ends. The piece of follower is then placed in position on the outside and extra length bolts used through the coupling, and also the piece of follower, which when tightened will pull the additional rubber up tight behind the old follower and stop the leak. In other words, this piece of follower and rubber may be used in the same manner as an O'Leary clamp, and with the same effect except where the rubber leak covers too large a portion of the coupling to allow a repair of this kind to be made. The followers for this method can be cut and the lip ripped off in any machine shop at a very nominal cost. This saves the expense of either a coupling leak clamp or of draining the line and installing new rubbers.

CUSHION CHECK VALVE

H. I. Rossiter, Sugar, Pa.

Check valve with vertical valve movement may be used in high speed compressing without destruction to valve by placing a vertical spring between valve and check valve cap, cutting down into valve so as to get as many coils of spring as possible. Spring smaller than valve guide should be used so as not to cut away outside of the guide.

DIPPING TANK OR TROUGH FOR STEEL PIPE —MADE OF 8-INCH PIPE OR LARGER

W. A. Hess, Clarion, Pa.

A dipping tank, or trough, is easily made from 8 inch pipe or larger, as illustrated by sketch.

The one that we are using at the present time is made of 8 inch or 10 inch pipe welded, so as to give us 40 feet in length. A short 15 foot joint was split in two and the ends welded. A set of arms made to fit the circle of pipe permits the pipe to be rolled, raised

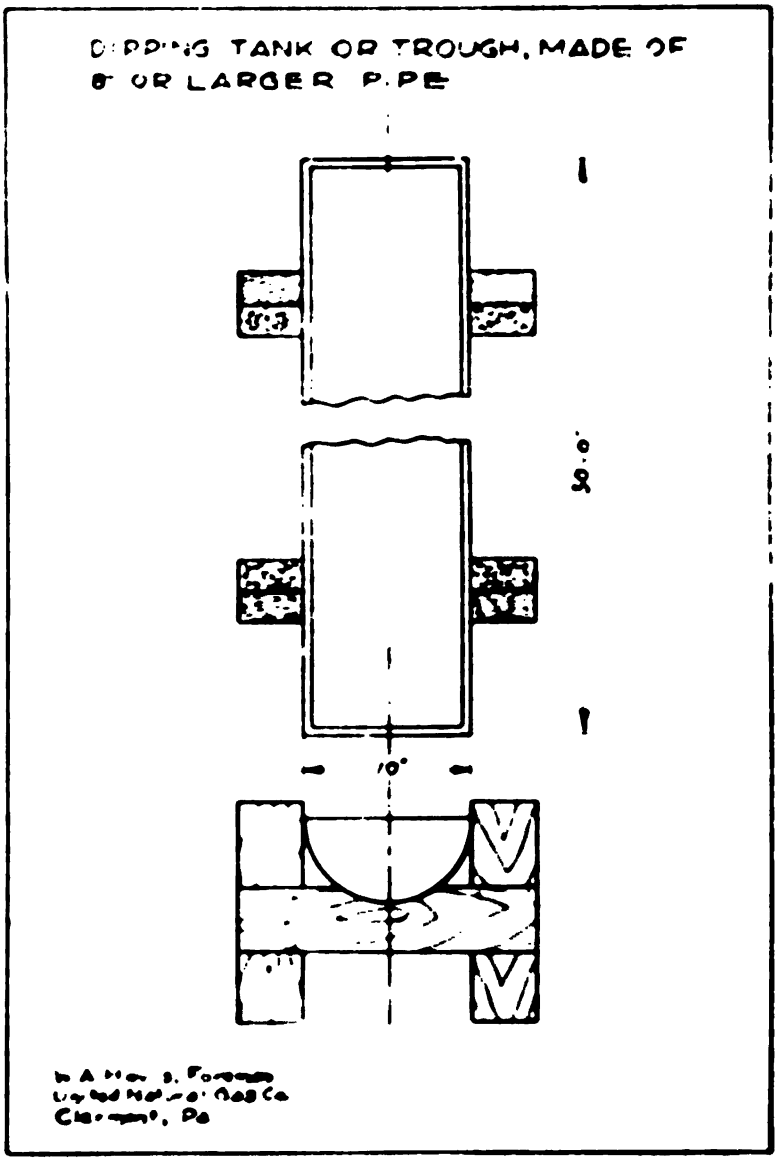

or lowered by the arms as shown. The circular arms in the trough are [illegible] which allow the pipe to be easily rolled [illegible] the pipe is immersed in the [illegible] bath. This tends to save oil and as the pipe has been turned [illegible] completely coated [illegible] and then the lever is lowered which raises the pipe out of the oil and permits the surplus oil to drain off before the [illegible] is placed on the pipe [illegible]. This arrangement is made possible so that it can be moved to the various pipe yards in the field

The hardest difficulties to overcome usually lie within ourselves.—Vulcan Bulletin.

THE BIG FIVE

"KNOW YOUR PRODUCT"

ATLANTIC CITY. NEW JERSEY

OCTOBER 23 TO 27. 1922

BOOTHS 131 AND 144

The Big Five

The Ruud Educational Exhibit, the Foremost Presentation of Water Heater Fundamentals to be seen at Atlantic City

I Ruud Battleship Mechanism.

II Ruud Automatic Moment-Valve Controlled Storage System.

III Ruud Automatic Water Heater Skeleton.
(Instantaneous Type)

IV Ruud Tank Heater.
(Analysis of Construction)

V Ruud Automatic Water Heater Skeleton.
(Instantaneous Cottage Type)

"Heat water with gas."

That is the imperative action for 1923.

The automatic gas water heater is ranking first in the selling program of every forward-thinking gas company.

The automatic water heater market is greatly undersold. Its sales possibilities are enormous.

Replacement selling is at a minimum. Every sale is an increased outlet for gas.

Automatic water heater business for 1923 will dwarf previous records for two reasons.

1. Organized selling effort will capture the unsold market.
2. The automatic water heater is the logical instrument to increase the sale of gas.

HEAT WATER WITH GAS

The Big Five—a Tabloid, yet Complete
Water Heater Education

To sell more gas water heaters, know your product.

The Ruud Educational Exhibit is the first in four years to be shown under complete operating conditions.

Here, with the apparatus functioning before you, you can absorb a complete water heater education so that you will be able to know thoroughly the basic principles of water heater construction.

The exhibit will be as interestingly instructive as a trip to the factory.

It will give you a greater water heater understanding; it will prepare you for a water heater selling that will eclipse anything in the past.

The Big Five—the First Full Working Exhibit
in Four Years

I

Ruud Battleship Mechanism
(Instantaneous Type)

Built in a size which if adapted to a water heater would provide 100 gallons per minute capacity. The smallest detail of construction is clearly shown.

II

Ruud Automatic Moment-Valve
Controlled Storage System

A complete working exhibit—under water and gas—demonstrating the positive and accurate control of gas at one minute intervals.

III

Ruud Automatic Water Heater Skeleton
(Instantaneous Type)

In complete operation under water and gas showing every detail as it functions. Every working part can be seen as it operates.